TOSHIBA CMOS DIGITAL INTEGRATED CIRCUIT SILICON MONOLITHIC

TC83230-0010

TC83230-0010 : SINGLE-CHIP CMOS LSI FOR CALCULATORS WITH PRINTERS (APPLICABLE PRINTER HEADS : PTMFL 63 MANUFACTURED BY ALPS)

The TC83230-0010 LSI is a single-chip CMOS LSI for use in calculators with printers.
It integrates I/O logic circuits necessary to configure a calculator with 10-digit display, two-memory function, serial printer used to print calculation results, oscillator, and LCD drivers.

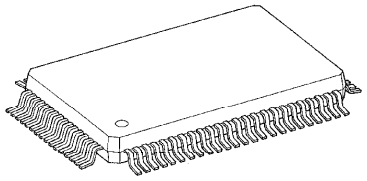

QFP80-P-1420-0.80A

Weight : 1.52 g (Typ.)

FEATURES

Operational Features

- Print — 11 digits of data. (including decimal point.) 1 digit of minus sign, 2 digits of operational symbol. 1-color printing (black).
- Display — 10 digits of data. (including punctuation in each digit.) 1 digit of floating minus sign, memory load, error symbol, grand total memory load, 3 digits of commas.
- Decimal output — Decimal set lock key controls output format. Fixed decimal setting ("0", "1", "2", "3", "4", "6"), full floating decimal, and ADD mode.
- Key-input buffer — 12 words
- Operation methods — addition and subtraction : by ARITHMETIC operation; multiplication and division : by algebraic operation

980910EBA1

- TOSHIBA is continually working to improve the quality and the reliability of its products. Nevertheless, semiconductor devices in general can malfunction or fail due to their inherent electrical sensitivity and vulnerability to physical stress. It is the responsibility of the buyer, when utilizing TOSHIBA products, to observe standards of safety, and to avoid situations in which a malfunction or failure of a TOSHIBA product could cause loss of human life, bodily injury or damage to property. In developing your designs, please ensure that TOSHIBA products are used within specified operating ranges as set forth in the most recent products specifications. Also, please keep in mind the precautions and conditions set forth in the TOSHIBA Semiconductor Reliability Handbook.
- The products described in this document are subject to the foreign exchange and foreign trade laws.
- The information contained herein is presented only as a guide for the applications of our products. No responsibility is assumed by TOSHIBA CORPORATION for any infringements of intellectual property or other rights of the third parties which may result from its use. No license is granted by implication or otherwise under any intellectual property or other rights of TOSHIBA CORPORATION or others.
- The information contained herein is subject to change without notice.

- Function — four function, repeat multiplication and division, mixed calculation, square calculation, percentage calculation, percent discount and add-on calculation, memory calculation, delta percent calculation, add-mode calculation, mark-up / down calculation, total calculation, constant calculation, tax calculation
  Two-key rollover
- Leading zero suppression

Protection

i) In the overflow condition, all key except "C", "C / CE", "CE", "Feed", "→" key are inoperative.

ii) Key chatter protection.

Auto-clear at power on

Auto-clear functions by connecting a capacitor to the RESET pin.

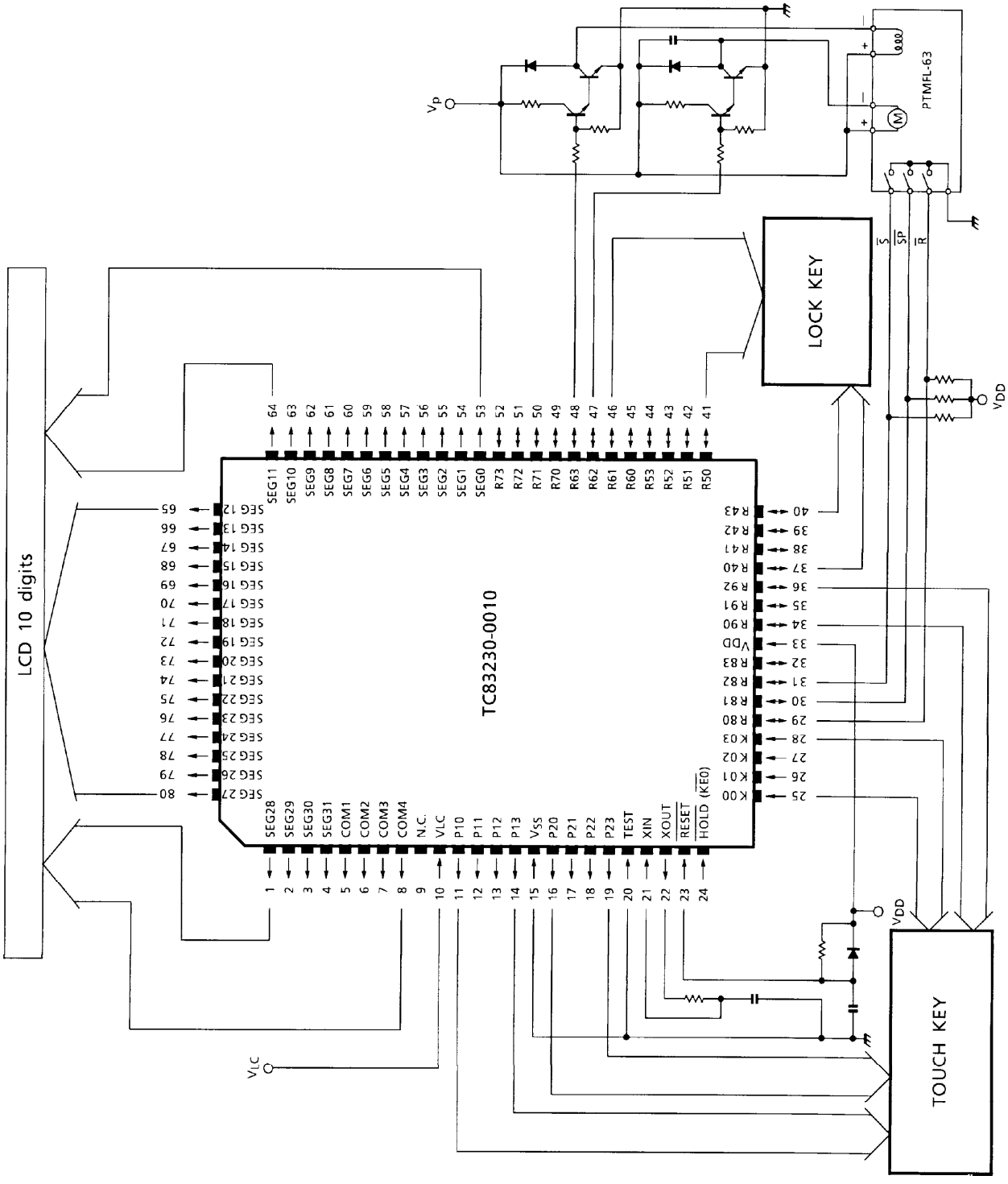

SYSTEM BLOCK DIAGRAM

TC83230-0010—03

CONNECTION OF LCD

SEGMENT

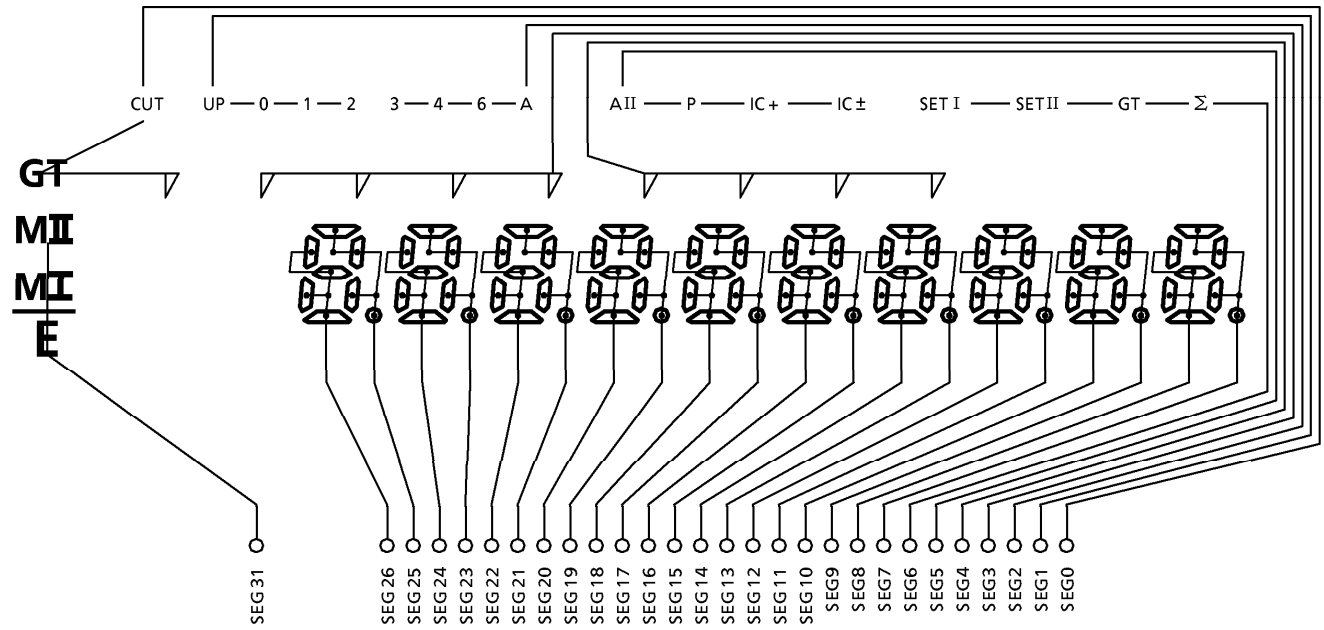

COMMON

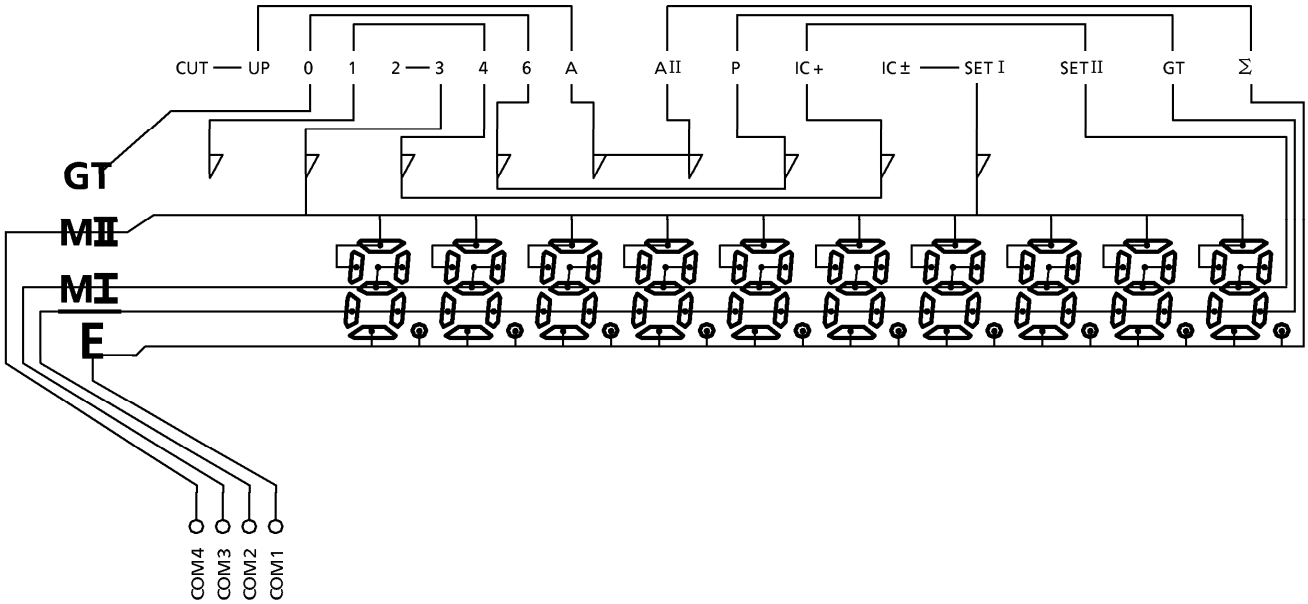

KEY CONNECTION

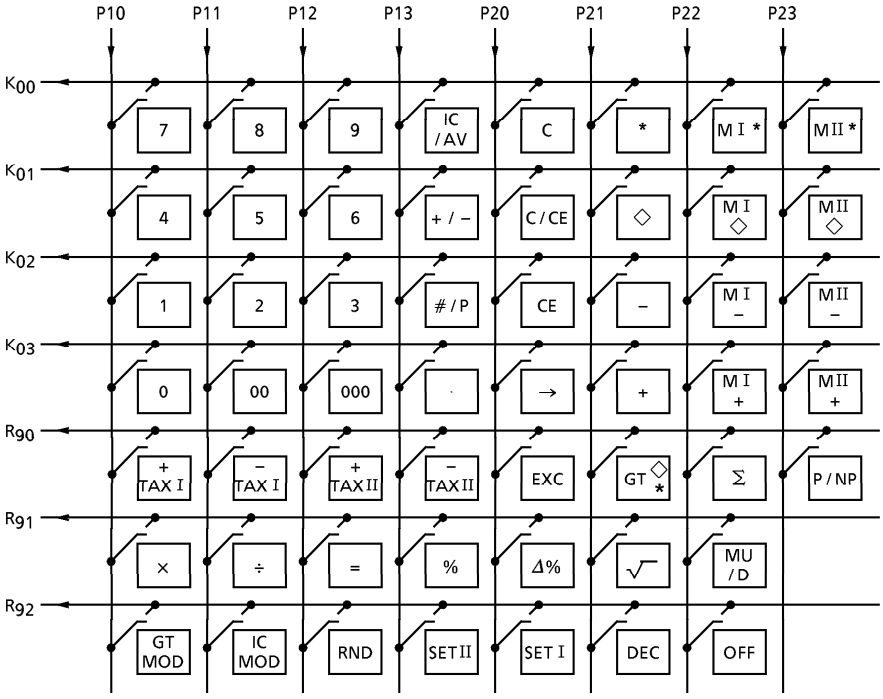

Touch Key

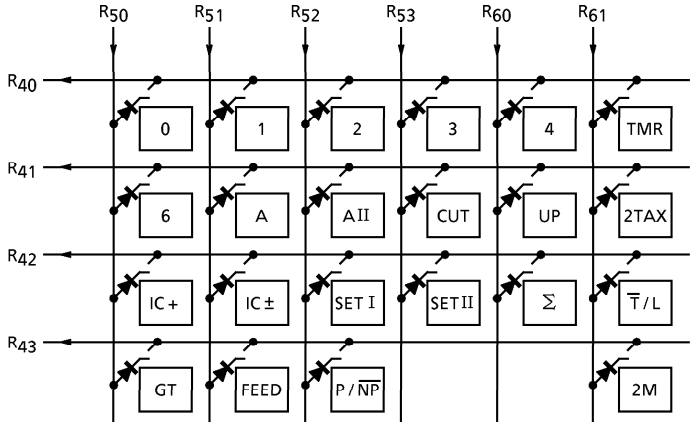

Lock Key

Touch Key select

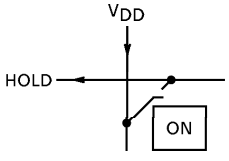

ON Key

PIN ASSIGNMENT

QFP80

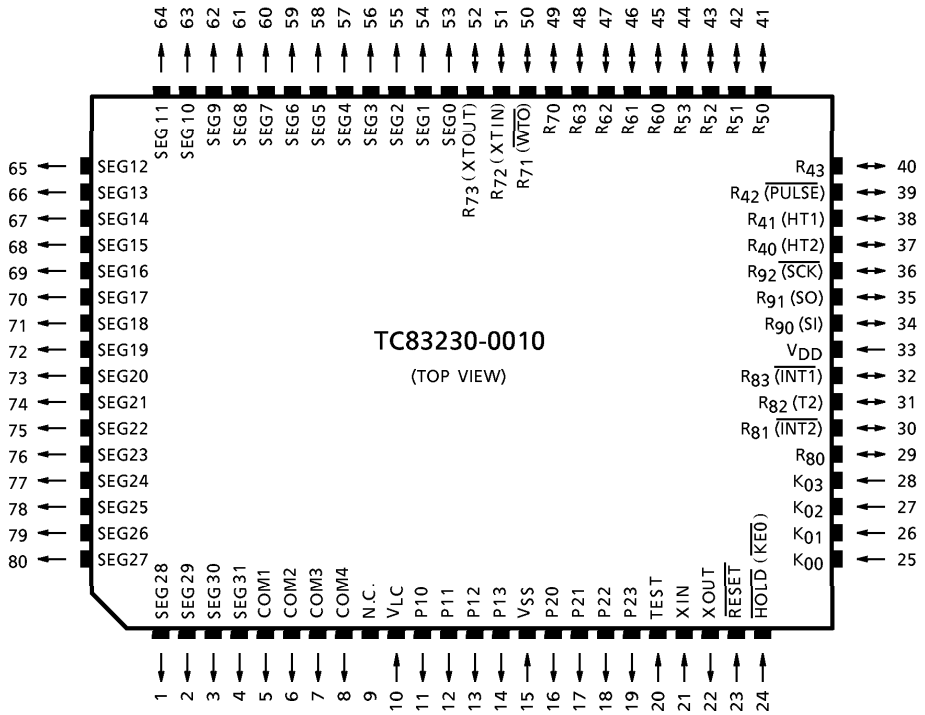

SPECIFICATION OF CALCULATOR

Operation specifications

1) Operations depending on key types and modes

- Touch key

KEY NAME	CAL MODE		TAX SET MODE (SET Ⅰ / Ⅱ KEY IS ON)	
MODE SWITCH	TOUCH KEY MODE	LOCK KEY MODE	TOUCH KEY MODE	LOCK KEY MODE
C	Operates as clear key	Operates as clear key	Clears input data	Clears input data
CE	Operates as clear entry key	Operates as clear entry key	Clears input data	Clears input data
C / CE	Operates as clear or clear entry key	Operates as clear or clear entry key	Clears input data	Clears input data
Numeral	Numeral Key-inputs numerals	Numeral Key-inputs numerals	Inputs numerals	Inputs numerals
OFF	Operates as off key	—	Unused	Unused
.	Key-inputs decimal points	Key-inputs decimal points	Key-inputs decimal points	Key-inputs decimal points
*, ◇	Operates as total or sub-total key	Operates as total or sub-total key	Unused	Unused
+, − ×, ÷	Operates as four-function key	Operates as four-function key	Unused	Unused
=	Operates as = key	Operates as = key	Unused	Unused
P / NP	Switches print or non-print	—	Unused	Unused
RND	Switches round-off and round-up	—	Unused	Unused
DEC	Switches decimal points	—	Unused	Unused
%	Operates as % key	Operates as % key	Unused	Unused
Δ%	Operates as delta percentage calculation key	Operates as delta percentage calculation key	Unused	Unused
MU / D	Operates as mark-up / down key	Operates as mark-up / down key	Unused	Unused
IC / AVE	Operates as item count key or average key	Operates as item count key or average key	Unused	Unused
# / P	Operates as non-add-print key for left-justified printing	Operates as non-add-print key for left-justified printing	Unused	Unused
→	Operates as right-shift key	Operates as right-shift key	Operates as right-shift key	Operates as right-shift key
+ / −	Operates as sign change key	Operates as sign change key	Unused	Unused

KEY NAME	CAL MODE		TAX SET MODE (SET Ⅰ / Ⅱ KEY IS ON)	
MODE SWITCH	TOUCH KEY MODE	LOCK KEY MODE	TOUCH KEY MODE	LOCK KEY MODE
MⅠ*, MⅡ* MⅠ◇, MⅡ◇, MⅠ −, MⅡ −, MⅠ +, MⅡ +	Operates as memory function key	Operates as memory function key	Unused	Unused
−TAXⅠ / Ⅱ	Operates as −TAXⅠ / Ⅱ key	Operates as −TAXⅠ / Ⅱ key	Unused	Unused
+TAXⅠ / Ⅱ	Operates as +TAXⅠ / Ⅱ key	Operates as +TAXⅠ / Ⅱ key	Unused	Unused
Σ	Operates as Σ key	—	Unused	Unused
IC MOD	Operates as IC-mode key	—	Unused	Unused
GT MOD	Operates as GT-mode or non-GT mode key	—	Unused	Unused
GT◇*	Operates as GT key	Operates as GT key	Unused	Unused
EXC	Operates as EXC key	Operates as EXC key	Unused	Unused
√	Operates as √ key	Operates as √ key	Unused	Unused

- Lock key

KEY NAME	CAL MODE		TAX SET MODE (SET Ⅰ / Ⅱ KEY IS ON)	
MODE SWITCH	TOUCH KEY MODE	LOCK KEY MODE	TOUCH KEY MODE	LOCK KEY MODE
0, 1, 2, 3, 4, 6, A, AⅡ	—	Switches decimal points	Unused	Unused
CUT, UP	—	Switches round-off and round-up	Unused	Unused
IC±, IC+	—	Operates as IC± / IC+ key	Unused	Unused
Σ	—	Operates as Σ key	Unused	Unused
GT	—	Switches GT-mode or non-GT mode	Unused	Unused
FEED	Operates as paper feed key	Operates as paper feed key	Operates as paper feed key	Operates as paper feed key
P / $\overline{NP}$	—	Switches print or non-print	Unused	Unused
* $\overline{T}$ / L	Selects lock key mode or touch key mode.			
* 2TAX	Selects single tax mode or double tax mode.			
* 2M	Selects single memory mode or double memory mode.			

* Can switch modes only with the reset key.

2) Explanation of function

[0~9] [00, 000] ..... Keys in numbers from 0 to 9, 00, and 000. If the number of displays digits exceeds 10 or 12 key entry is invalid.

[·] ..... If this key is pressed after a key operation except data entry, the displays is cleared and entry of [·] is stored in memory. The decimal point is shifted for subsequent data entry. If the [·] key is pressed during data entry, displays does not change.

[+, −] ..... Add or subtract operation data and displays the result. The decimal point is floating except when A mode is specified. Addition or subtraction can be performed repeatedly.
If these key are pressed in multiplication / division mode or in constant calculation mode, add or subtract displays data to addition / subtraction registers, then displays the result. At this time, in the operation mode multiplicand or divisor do not change.
These keys increment or decrement the item counter. In the following operation mode, the operations are executed, and the results are printed and displayed. At that time, addition or subtraction using the addition / subtraction register is not executed.

(1) percent discount / add-on calculation

$a \times b\%$ +……a + (ab / 100)
$c\%$ +……a + (ac / 100)
$a \times b\%$ −……a − (ab / 100)
$c\%$ −……a − (ac / 100)

Percent discount / add-on with constants are calculated as above.

[◇] ..... Prints and displays the intermediate result in addition / subtraction register. In item count mode, prints the contents of the item counter before the calculation result printing.
Contents of data register or stored arithmetic instruction are not changed.

[*] ..... Prints and displays the result in addition / subtraction register. Automatically feeds paper one line. In item count mode, the contents of the item counter are printed before the calculation result printing.
After this key operation, the contents of the addition / subtraction register are cleared. The contents of the item counter are cleared at the first addition / subtraction in next step. The contents of the data register or stored arithmetic instruction are not changed. When GT mode is specified, the result of addition / subtraction is added to the GT memory.

[M I +, MII +, M I −, MII −] ... If the arithmetic instruction is not stored or if the mode is constant calculation mode, first prints the displays contents after rounding to the specified number of decimal places, performs addition / subtraction using the data in memory, then stores the result in memory. If the multiplication / division instruction is stored, executes the arithmetic instruction, rounds the result to the specified number of decimal places, prints and displays the result, adds / subtracts with the data in memory, then stores the result to memory.
At that time, the multiplicand or divisor is stored together with the mode, constant calculation mode. When this key is pressed immediately after the [×] or [M I +, MII +, M I −, MII −] key, operation is the same as that for the [=] key ; that is, adds / subtracts using data in memory. This key operation increments or decrements the item counter for memory.

[M I ◇, MII ◇] .. Prints or displays the intermediate result of memory calculation. In item count mode, prints the contents of the item counter for memory before the calculation result printing. Contents of the data register or stored arithmetic instruction are not changed.

[M I ∗, MII ∗] .... Prints and displays the result of memory calculation and automatically feeds paper one line. In item count mode, prints the contents of the item counter for memory before the calculation result printing. After the [M I ∗, MII ∗] key operation, the contents of memory and the contents of the item counter for memory are cleared. Contents of the data register or stored arithmetic instruction are not changed.

[×, ÷] ..... If the multiplication or division instruction is stored in memory, prints the operators, performs the operations and displays the results while simultaneously storing a new arithmetic instruction in memory. The decimal point for the result is floating. If the [×] or [÷] key is pressed in constant calculation mode, prints the displayed numeric value without performing an operation and stores a new multiplication / division instruction in memory.

[=] ..... Executes a stored multiplication / division instruction, rounds the result to the specified number of decimal places, prints and displays the result, then automatically feeds the paper one line. Stores the multiplicand or divisor together with constant calculation mode in memory. If an instruction is not stored in memory, no operation is performed and the previous state is held. Pressing the [=] key immediately after the [×] or [÷] key performs the following operation.

a × = ····· aa
a ÷ = ····· 1

[%] ..... If an arithmetic instruction is stored in memory, performs percentage calculation, rounds the result to the specified number of decimal places, prints and displays the result. Stores the multiplicand / divisor together with constant calculation mode in memory. If a percentage calculation for multiplication is performed, percent discount / add-on calculation can be done by using the [+] or [−] key. At that time, addition / subtraction using the addition / subtraction register is not performed. If an arithmetic instruction is not stored in memory, no operation is performed and the previous state is held. Pressing the [%] key immediately after the [×] or [÷] key performs the following operation.

a × % = ····· aa / 100
a ÷ % = ····· 100

% key operation example : percent discount / add-on calculation

a × b% ····· ab / 100
+ ····· a + (ab / 100)
c% ····· ac / 100
+ ····· a + (ac / 100)
a × b% ····· ab / 100
− ····· a − (ab / 100)
c% ····· ac / 100
− ····· a − (ac / 100)

[MU / D] ..... If a multiplication / division instruction is stored in memory, cancels the data. The decimal point for the result is floating.

MU / D key operation example :

aMU / Db = ·····	a / (1 − (b / 100)) − a	(Prints profit)
	a / (1 − (b / 100))	(Mark-up)
c = ·····	a / (1 − (c / 100)) − a	(Prints profit)
	a / (1 − (c / 100))	(Mark-up)
aMU / Db + / − = ·····	a / (1 + (b / 100)) − a	(Prints profit)
	a / (1 + (b / 100))	(Mark-down)
c + / − = ·····	a / (1 + (c / 100)) − a	(Prints profit)
	a / (1 + (c / 100))	(Mark-down)

[Δ%] ..... If a multiplication / division instruction is memorized, cancels the data.

Δ% key operation example :

aΔ%	b = ·····	b – a	
		(b – a) / |a|	(Prints difference)
	c = ·····	c – a	(Change delta percent)
		(c – a) / |a|	(Prints difference)
aΔ%	b + / – = ·····	– (b + a)	(Change delta percent)
		– (b + a) / |a|	(Prints difference)
	c + / – = ·····	– (c + a)	(Change delta percent)
		– (c + a) / |a|	(Prints difference)

[+ / –] ..... Inverts sign of the displayed number at key entry.

[→] ..... Shifts the contents of the displays to the right by one digit at key entry. For an estimation calculation error, cancels the error.

[GT$\overset{\diamond}{*}$] ..... Calls the contents of GT memory. If the key is pressed once, calls the contents of GT memory, but does not change current state. If the key is pressed twice, calls the contents of GT memory and clears them.

[C] ..... Cancels all arithmetic instructions and errors, clears the contents of all the registers except the memory register, and prints 0.C.

[CE] ..... If pressed at key entry, clears only the contents of the displays ; does not change the stored arithmetic instruction or the contents of the data register. Invalid if pressed after one of the following keys : [C] [×] [÷] [+] [–] [=] [%] [Δ%] [MI +, MII +] [MI –, MII –] [MI ◇, MII ◇] [MI *, MII *] [MU / D] [IC / AVE] .

The result of pressing the [CE] key after the [# / P] key depends on the state before the keys were pressed.

[IC +] ..... Selects item count mode.
[IC ±]

IC + ····· Counts up by the [+] or [–] key.
IC ± ····· Counts up by the [+] key, down by the [–] key.

[Σ] ..... If an operation is performed by the [=] or [%] key in auto accumulation calculation mode, adds the operation result to the addition / subtraction register and increments the item counter.

[C / CE] ..... If pressed at key entry, operates same as the [CE] key.
If pressed after one of the following keys, operates same as the [C] key : [C / CE] [×] [÷] [+] [−] [=] [%] [Δ%] [M I +, M II +] [M I −, M II −] [M I ◇, M II ◇] [M I *, M II *] [MU / D] [IC / AVE] .
The result of pressing the [C / CE] key after the [+ / −] or the [# / P] key depends on the state before the keys were pressed.

[# / P] ..... If pressed after the numerical key entry, prints the contents of the key entry data register together with the # symbol, but does not change the current state. If the key is pressed after a key except the numerical keys or [+ / −] key, does not change the contents of the displays or the current state. If the key is pressed in clock mode, automatically prints the displayed date and time.

[+TAX I / II / −TAX I / II] .. Calculate included tax operation or excluded tax operation. But, only prints and does not express the tax. Prints or displays the result-value. (Result-value adjusts decimal-point (TAB) setting.) Feeds the paper one line after prints.

TAX I key operation example : (TAX = 3%)

a [+TAX I]	..	a (3 / 100)	(Prints TAX)
	...	a + (a (3 / 100))	(Included TAX)
a [−TAX II]	..	a / (1 + 3 / 100) − a	(Prints TAX)
	...	a / (1 + 3 / 100)	(excluded TAX)

If pressed at key entry after number key entry, calculate the tax as a result of calculation.

When multiplication / division instruction is stored in memory.

[P / NP] ..... Switches between PRINT and NON-PRINT mode. At reset, NON-PRINT mode is set. Switches mode in each time when the [P / NP] key is pressed : P→NP→P→NP. In PRINT mode, displays "print mode". Valid only when the [$\overline{T}$ / L] lock key is off.

[RND] ..... Switches between round-up, round-off and half-adjust. At reset, half-adjust is set. Switches the mode in each time when the [RND] key is pressed : 5 / 4→↓ →↑ →5 / 4→↓ →↑ . Displays round-up / round-off. Valid only when the [$\overline{T}$ / L] lock key is off.

[EXC] ..... If an multiplication or division instruction is not stored in memory, it is invalid. Constant calculation of multiplication or division instruction exchange for the value of displays, and displays it.

[GT MOD] ..... Exchange GT-mode. (Initial setting isn't support GT-mode.)
GT mode cycles not-support and support. And displays GT-mode flag.
Only touch key mode is valid.

[IC MOD] ..... Exchange IC-mode. (Initial setting isn't support IC-mode.)
IC mode cycles not-support, IC + and IC ± -mode. And displays IC-mode flag.
Any touch key mode is valid.

[$\sqrt{\ }$] ..... Operates root-instruction and displays result-value with prints. (Result-value adjusts decimal-point (TAB) setting.)
After prints feeds the paper one line. If the value is minus, change to the plus value and operate root-instruction. Then produce an estimate calculation-error. But keep the arithmetic instruction and date-register.

[IC / AVE] ..... Prints or displays the item counter, when IC / AVE key continuously pressed twice just after pressed [*] key and [◇] key,
After first, prints or displays the item counter.
The second, the calculation of the mean number are executed, prints or displays the operation result.
After calculation of the mean number, item counter are cleared.

Example

a (+)
b (+)
c (+)
d (+)
e (+)
f (+)
g (+)

→ Addition to total addition substraction register

(*) → Displays or prints addition substraction register.
(IC / AVE) → Displays the item counter
(IC / AVE) → Displays or prints (a + b + c + d + e + f + g) / 7

Then even if IC-value is a negative, the calculation of the mean number.

Example

a (−)
b (−)
c (+)
d (−)

→ Addition to total addition substraction register

(*) → Displays or prints addition substraction register.
(IC / AVE) → Displays the item counter
(IC / AVE) → Displays or prints
(− a − b + c − d) / |4| (IC +)
(− a − b + c − d) / |− 2| (IC ±)

[DEC] ..... Switches the decimal point. At reset, floating point (F) is set. Switches the mode in each time when the [DEC] key is pressed as follows : F→0→1→2→3→4→6→A→AII→F→0→1. Displays the specified decimal point or add mode. Valid only when the [$\overline{T}$ / L] lock key is off.

3) Explanation of lock keys

[0, 1, 2, 3] .... Sets the specified decimal point. If no specification, floating is set.

[4, 6, A, AII] When processing floating point data, the operation result is zero-shifted. When A mode is specified, key-entered data are multiplied by 1 / 100 only when the key-entered numerical value is used for addition / subtraction or memory addition / subtraction. If the [·] key is pressed during data entry, A mode is invalid. The operation result is treated the same as the specified decimal point, 2. When AII mode is specified, key-entered data are multiplied by 1 / 100 only when the key-entered numerical value is used for multiplication / division by [=] key. If the [·] key is pressed during data entry, AII mode is invalid. The operation result is treated the same as the specified decimal point, 2.

[CUT, UP] ..... Rounds-off in CUT mode ; rounds-up in UP mode ; when no specification is made, half-adjusts. When a decimal point is specified, the digit (s) in the subsequent decimal place is (are) half-adjusted, rounded-off, or rounded-up (??). If floating point is specified, the value of the least significant digits which cannot be displayed is rounded off.

[P / $\overline{NP}$] ..... Switches between print and non print mode. When [P / $\overline{NP}$] lock key is off, disables all printing except [PF] or [# / P] key.
When mode changes from non-print to print, feeds the paper one line.

[IC +] ..... Selects item count mode.
[IC ±]

IC + ·····Counts up by the [+] or [–] key.
IC ± ·····Counts up by the [+] key, down by the [–] key.

[Σ] ..... If an operation is performed by the [=] or [%] key in auto accumulation calculation mode, adds the operation result to the addition / subtraction register and increments the item counter.

[GT] ..... In grand total mode, adds the total register to the GT register by the [*] key.

[$\overline{T}$ / L] ..... When the [$\overline{T}$ / L] lock key is off, the [P / NP], [Σ], [GT MOD], [IC MOD], [RND], and [DEC] keys are valid. When the [$\overline{T}$ / L] key is on, the [NP], [Σ], [GT], [IC +], [IC ±], [CUT], [UP], and [0, 1, 2, 3, 4, 6, A, AII] lock keys are valid.

[SET Ⅰ / SETⅡ] ..... When the [SET Ⅰ / SETⅡ] lock key is on, prints and express the stored tax rate. When the [SET Ⅰ / SETⅡ] lock key is off, store the expression data to the new tax rate. The result of tax rate is only floating-point, and not concent the decimal-point at this function.

[FEED] ..... Feed paper.

[TMR] ..... When the [TMR] lock key is on, auto power-off functions. (After approx. 6 minutes.)

[2TAX] ..... Switches between single tax and double tax mode. When the [2TAX] lock key is on, one tax rate can be set. (SETⅡ and TAXⅡ will be disabled.) When the [2TAX] lock key is off, two tax rates can be set.

[2M] ..... Selects single memory or double memory mode. When the [2M] lock key is on, one memory can be used. (MⅡ will be disabled.) When the [2M] lock key is off, two memories can be used.

4) ON, OFF key

[ON] ..... If pressed in HOLD mode, cancels HOLD. At that time, cancels all arithmetic instructions and errors. The contents of the memory register and the TAX RATE before HOLD mode are retained ; all other registers are cleared. While the [ON] key is pressed, the [OFF] key is invalid.

[OFF] ..... Forcibly enters HOLD mode (CPU sleep mode).

OPERATION EXAMPLE

KEY								TOUCH	PRINT			DISPLAY
TAB	4/5	IC	Σ	GT	MOD	2TAX	2M					
F	4/5	OFF	OFF	OFF	CAL	OFF	OFF	POWER ON				
									<PF>			
										*		
									<PF>			0.
								1+	1·	+		1.
								2-	2·	-		-1.
								◇	-1·	◇		-1.
								*	-1·	*		
									<PF>			-1.
								IC/AVE	2·			2.
F	4/5	IC+	OFF	OFF	CAL	OFF	OFF	IC/AVE	-0·5	÷ *		-0.5
								IC/AVE	0·			0.
								1+	1·	+		1.
								2-	2·	-		-1.
								◇	002			
									-1·	◇		-1.
								IC/AVE	2·			2.
								IC/AVE	-0·5	÷ *		-0.5
								IC/AVE	2·			2.
								*	002			
									-1·	*		
									<PF>			-1.
								IC/AVE	2·			2.
								IC/AVE	-0·5	÷ *		-0.5
								IC/AVE	0·			0.
F	4/5	OFF	OFF	OFF	CAL	OFF	OFF	3×	3·	×		3.
								4÷	4·	÷		12.
								=	4·	=		
									3·	*		
									<PF>			3.
								5×	5·	×		5.
								6%	6·	%		
									0·3	*		
									<PF>			0.3
								+	5·3	+ %		
									<PF>			5.3
								2÷	2·	÷		2.
								3%	3·	%		
									66·66666666	*		
									<PF>			66.66666666
								2 MU/D	2·	M		2.
								3=	3·	%		

(Note) <PF> .... Paper feed

KEY								TOUCH	PRINT			DISPLAY	
TAB	4/5	IC	Σ	GT	MOD	2TAX	2M						
									0.06185567	◇	*		
									2.06185567		*		
									<PF>				2.06185567
								2Δ%	2·	◇			2.
								3=	3·		=		
									1·	◇	*		
									50·	◇	%		
									<PF>				50.
F	4/5	OFF	Σ	OFF	CAL	OFF	OFF	3×	3·		×		3.
								4÷	4·		÷		12.
								=	4·		=		
									3·		+		
									<PF>				3.
								5×	5·		×		5.
								6%	6·		%		
									0·3		+		
									<PF>				0.3
								+	5·3	+	%		
									<PF>				5.3
								2÷	2·		÷		2.
								3%	3·		%		
									66·66666666		+		
									<PF>				66.66666666
								2 MU/D	2·		M		2.
								3=	3·		%		
									0.06185567	◇	*		
									2.06185567		+		
									<PF>				2.06185567
								2Δ%	2·		◇		2.
								3=	3·		=		
									1·	◇	*		
									50·		+		
									<PF>				50.
								*	122·0285223		*		
									<PF>				122.0285223
F	4/5	OFF	Σ	GT	CAL	OFF	OFF	2+	2·		+		2.
								3+	3·		+		5.
								*	5·	*	+		
									<PF>			GT	5.
								3-	3·		-	GT	-3.
								4-	4·		-	GT	-7.
								5-	5·		-	GT	-12.

KEY								TOUCH	PRINT			DISPLAY	
TAB	4/5	IC	Σ	GT	MOD	2TAX	2M						
								*	-12·	*	+		
									<PF>			GT	-12.
								GT	-7·	*	◇	GT	-7.
								GT	-7·	*	*		
									<PF>				-7.
F	4/5	OFF	Σ	OFF	CAL	OFF	OFF	MI+	--------1--------				
									-7·	M	+	MI	-7.
								5				MI	5.
								MII+	--------2--------				
									5·	M	+	MII MI	5.
								MI◇	--------1--------				
									-7·	M	◇	MII MI	-7.
								MI*	--------1--------				
									-7·	M	*		
									<PF>			MII	-7.
								MII◇	--------2--------				
									5·	M	◇	MII	5.
								MII*	--------2--------				
									5·	M	*		
									<PF>				5.
								#/P	5·		◇		5.
								2 #/P	#2				2.
								#/P	2·		◇		2.
								0÷	0·		÷		0.
								=	0·		=		0.
									··················				
									0·		*		
									<PF>			E	0.
								C	0·		*		
									<PF>				0.
F	CUT	OFF	OFF	OFF	SETI	OFF	OFF		--------1--------				
									0·		%		
									<PF>				0.
								3					3.
F	CUT	OFF	OFF	OFF	CAL	OFF	OFF		--------1--------				
									3·		%		
									<PF>				0.
								C	0·		*		
									<PF>				0.
F	CUT	OFF	OFF	OFF	SETI	OFF	OFF		--------1--------				
									3·		%		
									<PF>				3.

KEY								PRINT			DISPLAY
TAB	4/5	IC	Σ	GT	MOD	2TAX	2M	TOUCH			
F	CUT	OFF	OFF	OFF	CAL	OFF	OFF				0.
F	CUT	OFF	OFF	OFF	SETⅡ	OFF	OFF		--------2--------		
									0· %		
									<PF>		0.
								5			5.
F	CUT	OFF	OFF	OFF	CAL	OFF	OFF		--------2--------		
									5· %		
									<PF>		0.
F	CUT	OFF	OFF	OFF	SETⅡ	OFF	OFF		--------2--------		
									5· %		
									<PF>		5.
F	CUT	OFF	OFF	OFF	CAL	OFF	OFF				0.
								1560			1,560.
								+TAXⅠ	--------1--------		
									1560·		
									46·8 ◇		
									1606·8 *		
									<PF>		1,606.8
								1560			1,560.
								+TAXⅡ	--------2--------		
									1560·		
									78· ◇		
									1638· *		
									<PF>		1,638.
F	CUT	OFF	OFF	OFF	CAL	OFF	OFF	+TAXⅠ	--------1--------		
									1638· ◇		
									49·14 ◇		
									1687·14 *		
									<PF>		1,687.14
								1560			1,560.
								×	1560· ×		1,560.
								78900			78,900.
F	4/5	OFF	OFF	OFF	CAL	OFF	OFF	+TAXⅠ	--------1--------		
									78900· =		
									123084000· ◇		
									3692520· ◇		
									126776520· *		
									<PF>		126,776,520.
								=			126,776,520.
								5			5.
								×	5· ×		5.
								+TAXⅠ			5.

KEY								TOUCH	PRINT			DISPLAY	
TAB	4/5	IC	Σ	GT	MOD	2TAX	2M						
								=	5·	=			
									25·	*			
									<PF>				25.
								+TAX Ⅰ	--------1--------				
									25·	◇			
									0·75	◇			
									25·75	*			
									<PF>				25.75
								=					25.75
								C	0·	*			
									<PF>				0.
2	CUT	OFF	OFF	OFF	CAL	OFF	OFF	1560					1,560.
								+	1560·00	+			1,560.00
								1100					1,100.
								+	1100·00	+			2,660.00
								+TAX Ⅱ	--------2--------				
									2660·00	◇			
									133·00	◇			
									2793·00	*			
									<PF>				2,793.00
F	CUT	OFF	OFF	OFF	CAL	OFF	OFF	+TAX Ⅰ	--------1--------				
									2793·00	◇			
									83·79	◇			
									2876·79	*			
									<PF>				2,876.79
								98000000					
								00					9,800,000,000.
								+TAX Ⅰ	--------1--------				
									9800000000·				
									294000000·	◇			
									·····--------				
									1·009400000	*			
									<PF>			E	1.009400000
								C	0·	C			
									<PF>				0.
								1560					1,560.
								+/-					-1,560.
								+TAX Ⅰ	--------1--------				
									-1560·				
									-46·8	◇			
									-1606·8	*			
									<PF>				-1,606.8

KEY								TOUCH	PRINT			DISPLAY
TAB	4/5	IC	Σ	GT	MOD	2TAX	2M					
								1560				1,560.
								-TAX Ⅰ	--------1--------			
									1560·			
									-45·436894	◇		
									1514·563106	*		
									<PF>			1,514.563106
								-TAX Ⅰ	--------1--------			
									1514·563106	◇		
									-44·113489	◇		
									1470·449617	*		
									<PF>			1,470.449617
								1560				1,560.
								-TAX Ⅱ	--------2--------			
									1560·			
									-74·285715	◇		
									1485·714285	*		
									<PF>			1,485.714285
								-TAX Ⅱ	--------2--------			
									1485·714285	◇		
									-70·7483	◇		
									1414·965985	*		
									<PF>			1,414.965985
F	CUT	OFF	OFF	OFF	SET Ⅰ	OFF	OFF		--------1--------			
									3·	%		
									<PF>			3.
								C				0.
F	CUT	OFF	OFF	OFF	CAL	OFF	OFF		--------1--------			
									0·	%		
									<PF>			0.
F	CUT	OFF	OFF	OFF	SET Ⅰ	OFF	OFF		--------1--------			
									0·	%		
									<PF>			0.
								1234				1234.
F	CUT	OFF	OFF	OFF	CAL	OFF	OFF		--------1--------			
									1234·	%		
									<PF>			0.
F	CUT	OFF	OFF	OFF	SET Ⅱ	OFF	OFF		--------2--------			
									5·	%		
									<PF>			5.
								C				0.
F	CUT	OFF	OFF	OFF	CAL	OFF	OFF		--------2--------			
									0·	%		

KEY									PRINT			DISPLAY
TAB	4/5	IC	Σ	GT	MOD	2TAX	2M	TOUCH				
									<PF>			0.
								98000000				
								00				9,800,000,000.
								+TAX I	--------1--------			
F	CUT	OFF	OFF	OFF	CAL	OFF	OFF		9800000000·			
									.....			
									0·	*		
									<PF>		E	0.
								C	0·	*		
									<PF>			0.
								2				2.
								×	2·	×		2.
								3				3.
								×	3·	×		6.
								EXC	3·	#		3.
								×	6·	×		18.
								EXC	6·	#		6.
								×	18·	×		108.
								EXC	18·	#		18.
								×	108·	×		1,944.
								=	108·	=		
									209952·	*		
									<PF>			209,952.
								9				9.
								√	9·	√		
									3·	*		
									<PF>			3.
								√	3·	√		
									1·732050807	*		
									<PF>			1,732050807
								+/-				-1,732050807
								√	-1·732050807	√		
									.....			
									-1·316074012	*		
									<PF>		E	-1·316074012
								C	0·	*		
									<PF>			0.
A	CUT	OFF	OFF	OFF	CAL	OFF	OFF	123				123.
								+	1·23	+		1.23
								456				456.
								+	4·56	+		5.79
								◇	5·79	◇		5.79

KEY									PRINT			DISPLAY	
TAB	4/5	IC	Σ	GT	MOD	2TAX	2M	TOUCH					
								*	5·79	*			
									<PF>				5.79
AⅡ	CUT	OFF	OFF	OFF	CAL	OFF	OFF	789					789.
								×	789·	×			789.
								100					100.
								=	1·00	=			
									789·00	*			
									<PF>				789.00
(Don't do it.)								123					123.
								+	123·00	+			123.00
								456					456.
								+	456·00	+			579.00
								*	579·00	*			
									<PF>				579.00
F	4/5	OFF	OFF	OFF	CAL	ON	ON	(RESET)	<PF>				
										*			
									<PF>				0.
								7					7.
								+/-					-7.
								MI+	-7·	M +		MI	-7.
								5				MI	5.
								MⅡ+				MI	5.
								MI◇	-7·	M ◇		MI	-7.
								MI*	-7·	M *			
									<PF>				-7.
F	4/5	OFF	OFF	OFF	SETⅠ	ON	ON		0·	%			
									<PF>				0.
								3					3.
F	4/5	OFF	OFF	OFF	CAL	ON	ON		3·	%			
									<PF>				0.
								C	0·	*			
									<PF>				0.
F	4/5	OFF	OFF	OFF	SETⅠ	ON	ON		3·	%			
									<PF>				3.
F	4/5	OFF	OFF	OFF	CAL	ON	ON						0.
F	4/5	OFF	OFF	OFF	SETⅡ	ON	ON						0.
								5					5.
F	4/5	OFF	OFF	OFF	CAL	ON	ON						5.
F	4/5	OFF	OFF	OFF	SETⅡ	ON	ON						5.
F	4/5	OFF	OFF	OFF	CAL	ON	ON						5.
								CE					0.

MAXIMUM RATINGS (V_{SS} = 0V)

PARAMETER	SYMBOL	VALUE	UNIT
Supply Voltage 1	V_{DD}	−0.3~6	V
Supply Voltage (LCD Drive)	V_{LC}	−0.3~V_{DD} + 0.3	V
Input Voltage	V_{IN}	−0.3~V_{DD} + 0.3	V
Output Voltage	V_{OUT}	−0.3~V_{DD} + 0.3	V
Output Current	I_{OUT}	3.2	mA
Power Dissipation	P_D	600	mW
Soldering Temperature	T_{sld}	260 (10s)	°C
Storage Temperature	T_{stg}	−55~125	°C
Operating Temperature	T_{opr}	0~40	°C

ELECTRICAL CHARACTERISTICS

Recommended operating conditions (V_{SS} = 0V, T_{opr} = 0~40°C)

PARAMETER	SYMBOL	TEST CIR-CUIT	CONDITION	MIN	MAX	UNIT
Operating Temperature	T_{opr}	—	—	0	40	°C
Supply Voltage	V_{DD}	—	NORMAL	4.5	5.5	V
		—	SLOW			
		—	HOLD	2.0		
High-Level Input Voltage (Non-Schmitt Circuit)	V_{IH1}	—	$V_{DD} \geqq 4.5V$	V_{DD} × 0.7	V_{DD}	
High-Level Input Voltage (Schmitt Circuit)	V_{IH2}			V_{DD} × 0.75	V_{DD}	
High-Level Input Voltage	V_{IH3}	—	$V_{DD} < 4.5V$	V_{DD} × 0.9	V_{DD}	
Low-Level Input Voltage (Non-Schmitt Circuit)	V_{IL1}	—	$V_{DD} \geqq 4.5V$	0	V_{DD} × 0.3	
Low-Level Input Voltage (Schmitt Circuit)	V_{IL2}			0	V_{DD} × 0.25	
Low-Level Input Voltage	V_{IL3}	—	$V_{DD} < 4.5V$	0	V_{DD} × 0.1	

DC electrical characteristics (V_{SS} = 0V, T_{opr} = 0~40°C)

PARAMETER	SYMBOL	TEST CIR-CUIT	TERMINAL	CONDITION	MIN	TYP.	MAX	UNIT
Hysteresis Voltage (Schmitt Circuit)	V_{HS}	—	Hysteresis Input	—	—	0.7	—	V
Input Current	I_{IN1}	—	KO port, TEST, $\overline{RESET}$, $\overline{HOLD}$	V_{DD} = 5.5V V_{IN} = 5.5 / 0V	—	—	±2	μA
	I_{IN2}	—	Open Drain R port, P port					
Input Resistance	R_{IN1}	—	KO port TEST with Input Resistor	V_{DD} = 5.5V V_{IN} = 5.5 / 0V	30	70	150	kΩ
	R_{IN2}	—	$\overline{RESET}$, $\overline{HOLD}$		100	220	450	
Output Leakage Current	I_{LO1}	—	Sink Open Drain R port	V_{DD} = 5.5V V_{OUT} = 5.5V	—	—	2	μA
	I_{LO2}	—	Source Open Drain R port, P port	V_{DD} = 5.5V V_{OUT} = − 1.5V	—	—	− 2	
High-Level Output Voltage	V_{OH}	—	Source Open Drain R port, P port	V_{DD} = 5.5V I_{OH} = − 1.6mA	2.4	—	—	V
Low-Level Output Voltage	V_{OL}	—	Sink Open Drain R port	V_{DD} = 5.5V I_{OL} = 1.6mA	—	—	0.4	V
Pull-Down Resistance	R_{OUT}	—	R port, P port	V_{DD} = 5.5V V_{IN} = 5.5V	30	70	150	kΩ
Output Resistance	R_{OS}	—	SEG	V_{DD} = 5V V_{DD} − V_{LC} = 3V	—	—	35	kΩ
	R_{OC}	—	COM					
Output Voltage	$V_{O2/3}$	—	SEG / COM		3.8	4.0	4.2	V
	$V_{O1/2}$				3.3	3.5	3.7	
	$V_{O1/3}$				2.8	3.0	3.2	
Supply Current (Normal)	I_{DD}	—	—	V_{DD} = 5.5V, V_{LC} = V_{SS} f_c = 4MHz	—	3	6	mA
Supply Current (Hold)	I_{DDH}	—	—	V_{DD} = 5.5V	—	0.5	10	μA

(Note 1) Typ. values are guaranteed at T_{opr} = 25°C, V_{DD} = 5V.
(Note 2) I_{IN1} : excepts a current through a internal Pull up / down Resistor.
(Note 3) R_{OS}, R_{OC} : Shows On-Resistor at level switching.
(Note 4) $V_{O2/3}$: Shows 2 / 3 Level Output Voltage at which 1 / 4 or 1 / 3 duty LCD drive.
(Note 5) $V_{O1/2}$: Shows 1 / 2 Level Output Voltage at which 1 / 2 duty or static LCD drive.
(Note 6) $V_{O1/3}$: Shows 1 / 3 Level Output Voltage at which 1 / 4 or 1 / 3 duty LCD drive.
(Note 7) I_{DD}, I_{DDH} : Current consumption at V_{IN} = 5.3V / 0.2V should be under that KO port is open and R port Voltage Level is valid.

OSCILLATION CIRCUIT (V_{SS} = 0V, V_{DD} = 4.5~5.5V, T_{opr} = 0~40°C)

RECOMMENDED CIRCUIT	CONDITION	MIN	TYP.	MAX	UNIT
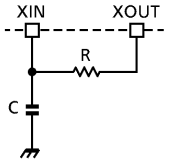	V_{DD} = 5.0V C = 100pF R = 1kΩ ± 2%	2.4	4.0	5.6	MHz

AC electrical characteristics (V_{SS} = 0V, V_{DD} = 4.5~6.0V, T_{opr} = 0~40°C)

PARAMETER	SYMBOL	TEST CIR-CUIT	CONDITION	MIN	TYP.	MAX	UNIT
Instruction Cycle Time	t_{CY}	—	NORMAL	1.9	—	20	μs
		—	SLOW	235	—	267	
High-Level Clock Pulse Width	t_{WCH}	—	External Clock Operation	80	—	—	ns
Low-Level Clock Pulse Width	t_{WCL}	—					
Shift Data Hold Time	t_{SDH}	—	—	0.5tcy − 300	—	—	ns
High Speed Timer / Counter Input Frequency	f_{HT}	—	—	—	—	f_C	MHz

WAVEFORMS FOR DISPLAY

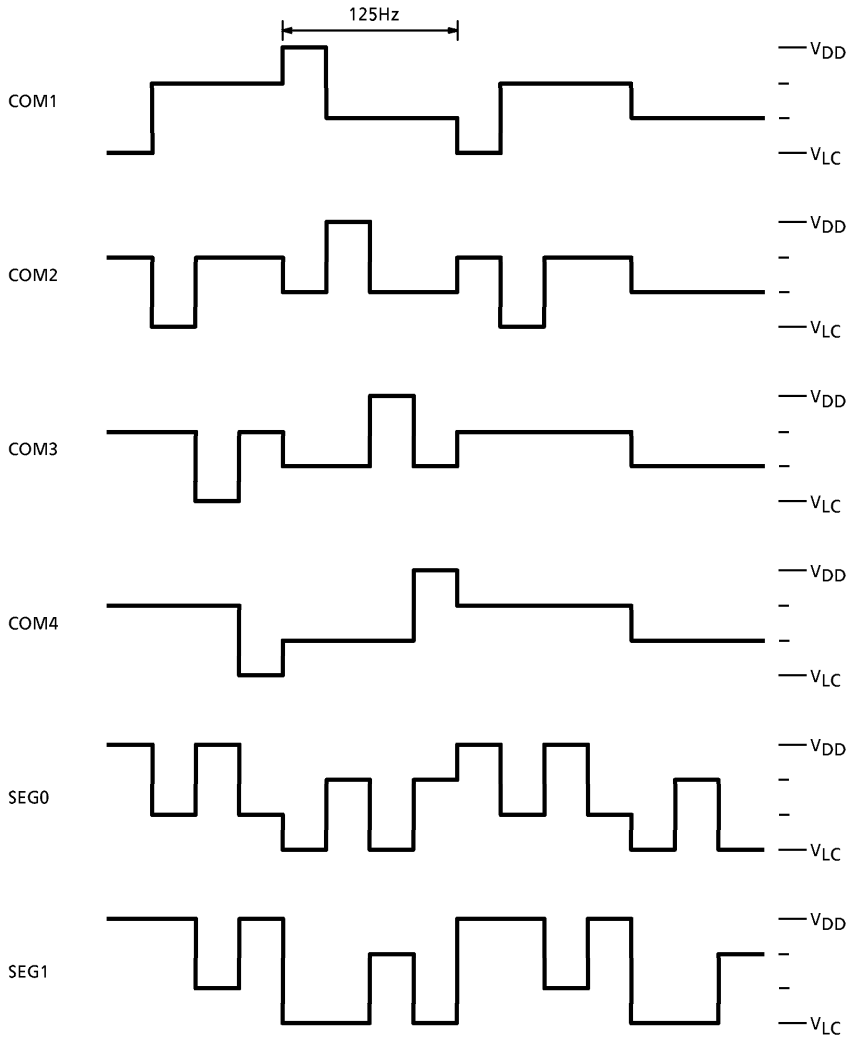

THE PROPOSAL OF OUTER CIRCUIT FOR TAX RATE HOLDING WITH BACK-UP BATTERY.

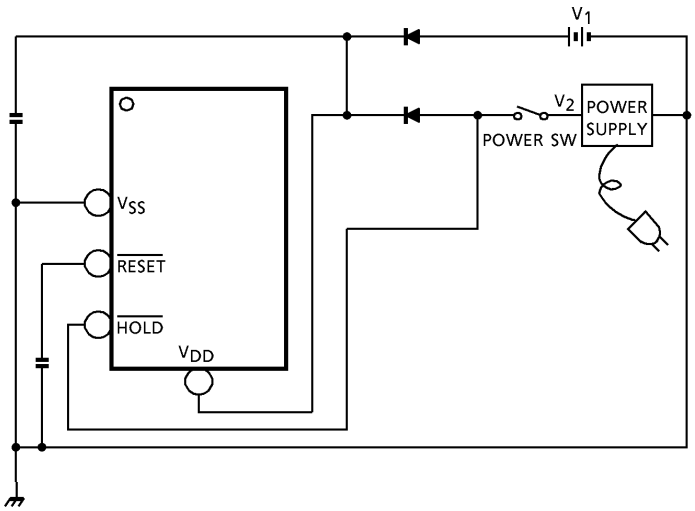

(Note)
V_1 = +3V : battery supply
V_2 = +5V : DC supply

($\overline{HOLD}$ pin is pulled down in the LSI, but normally pulled up to V_{DD}.
$\overline{RESET}$ pin is pulled up to V_{DD}.)

① Setting POWER SW to ON, V_2 is supplied to V_{DD} pin, and also to $\overline{HOLD}$ pin.
Then calculator operates normally.

② Setting POWER SW from ON to OFF, V_1 is supplied to V_{DD} pin and V_{SS} is supplied to $\overline{HOLD}$ pin.
Under this connection, TAX RATE is held.

③ Setting POWER SW to ON, V_2 is supplied to V_{DD} pin, and also to $\overline{HOLD}$ pin.
Then calculator operates normally with TAX RATE to be held.

<NOTE>

V_1 (battery) should be supplied to the circuit after V_2 (DC) supply, because of prevention from exhaustion of battery and abnormal operation.

PACKAGE DIMENSIONS

QFP80-P-1420-0.80A Unit : mm

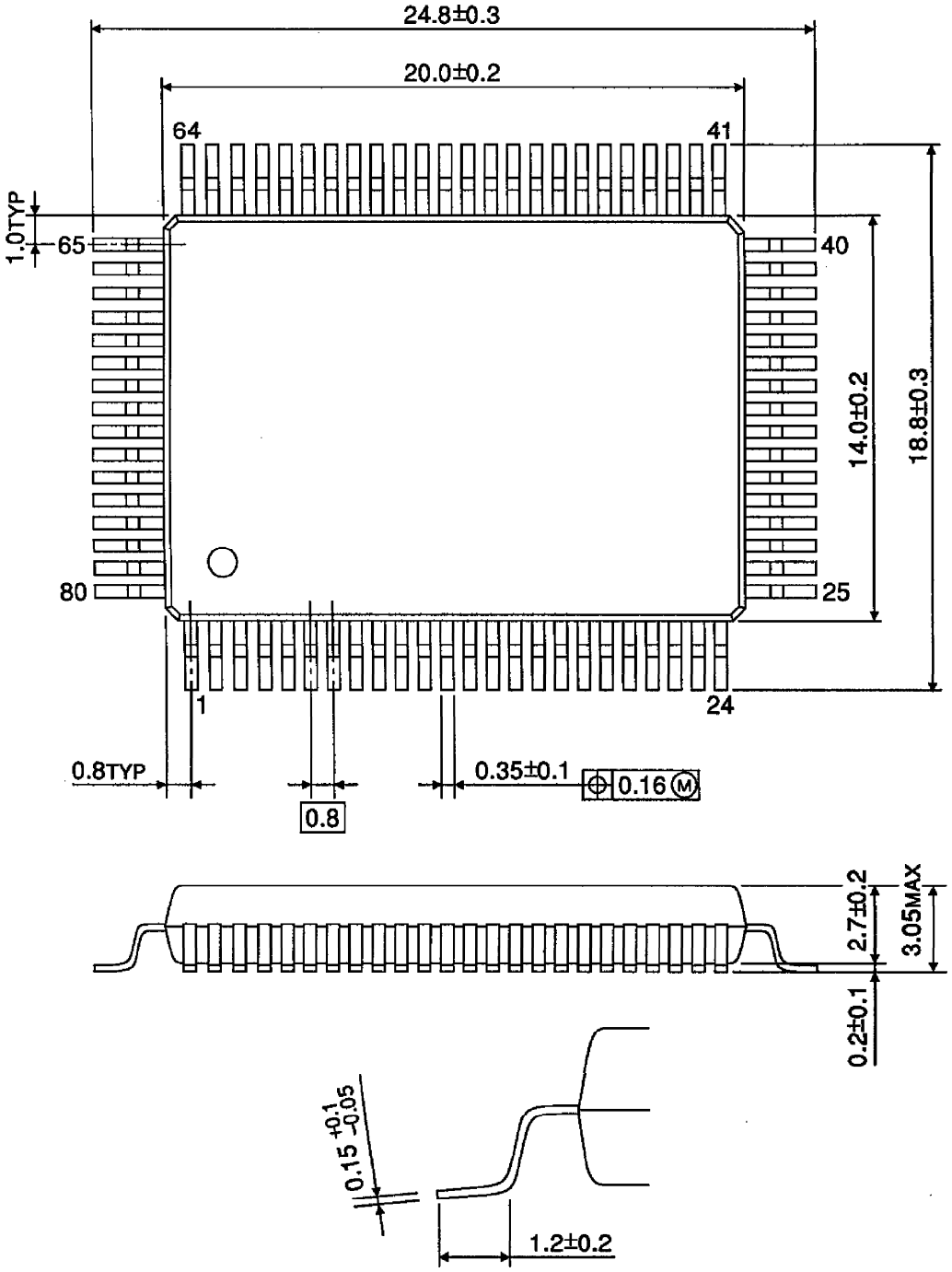

Weight : 1.52g (Typ.)