Photoelectric sensor
bifurcated retro-reflective sensor
SLE10B6VQ

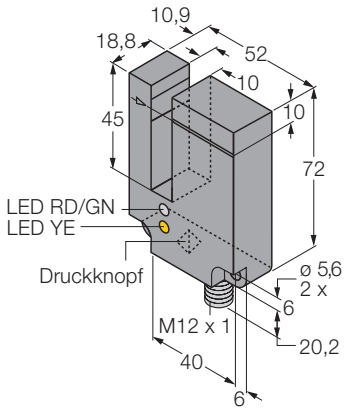

- **alarm indication**
- **sensitivity adjustable via teach button**
- **switching frequency 1 kHz**
- **M12 x 1 connector**

Wiring diagram

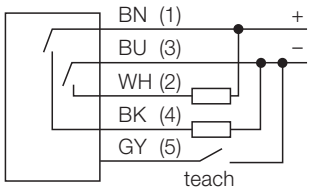

Photoelectric slot sensors combine the advantages of a sensor in a single compact housing with those of an opposed mode sensor. The slot width is 10 or 30 mm. The standard version is equipped with a potentiometer for sensitivity adjustments. The Expert version features a static or dynamic teach mode.

Type	SLE10B6VQ
Ident-No.	3060381
Operating mode	Slot sensors
Type of light	red
Wave length	680 nm
Operating temperature	-20 ...+ 70 °C
Rated operational voltage (DC) U_B	10... 30 VDC
Rated operational current (DC) I_e	≤ 150 mA
No-load current I_0	≤ 45 mA
Short-circuit protection	yes, cyclic
Reverse polarity protection	yes
Output function	normally open, PNP/NPN
Max. switching frequency	≤ 1 kHz
Housing style	slot sensor; SL10
Dimensions	72 x 52 x 18,8 mm
Housing material	plastic, Polyester
Lens	Kunststoff, Acryl
Wiring	connector, M12 x 1
Degree of protection	IP67
Supply voltage indication	LED green
Switching status indication	LED yellow
Excess gain indication	LED red
Alarm indication	LED yellow blinkend

Subject to change without notice • © Hans Turck GmbH & Co.KG 2002 • Edition: • 12.04.2004

Hans Turck GmbH & Co.KG • Postfach • D-45466 Mülheim an der Ruhr • Telefon 02 08/49 52-0 • Telefax 02 08/49 52-264