FC Receptacle Coaxial FP Laser

Characteristics(PT3344-12-3-2FC)

(T_c=25℃)

Parameter	Symbol	Test Condition	Min	Typ	Max	Unit
Threshold Current	I_{th}	CW	-	5	15	mA
Operating Current	I_{op}	CW	-	20	45	mA
Operating Voltage	V_{op}	CW, I_F=I_{op} (Note 1)	-	1.1	1.5	V
Central Wavelength	λc	CW, I_F=I_{op}	1290	1310	1330	nm
Spectral Width(RMS)	Δλ	CW, I_F=I_{op}	-	1.0	2.0	nm
Output Power	P_F	CW, I_F=I_{op}	0.1	-	-	mW
Rise and Fall Times	t_r,t_f	I_B =I_{th},10%~90% (Note2)	-	0.3	-	ns
Tracking Error	Er	T_c= 0～+70℃， APC (Note 3)	-	-	1.0	dB
Monitor Current	I_m	CW, I_F=I_{op} , V_R=5V	0.1	-	-	mA
Dark Current (Photodiode)	I_d	V_R=5V	-	0.01	0.1	μA

Note 1. I_F : Forward Current 2. I_B : Bias Current 3. E_r=MAX |10×log (P_F (T_c) / P_F (25)) |

Features

- InGaAsP/InP MQW laser
- Low operating current
- Excellent reliability
- Rear facet monitor
- Coaxial receptacle
- Wide operating tempertaure range

Absolute Maximum Ratings

(T_c=25℃)

Parameter	Symbol	Ratings	Unit
Storage Temperature	T_{stg}	−40～+85	℃
Operating Case Temperature	T_{op}	−40～+85	℃
Reverse Voltage (Laser diode)	V_R	2	V
Reverse Voltage (Photodiode)	V_R	20	V
Forward Current (Photodiode)	I_F	2	mA

Applications

- Telecommunication
- Data communication

Mechanical Outline

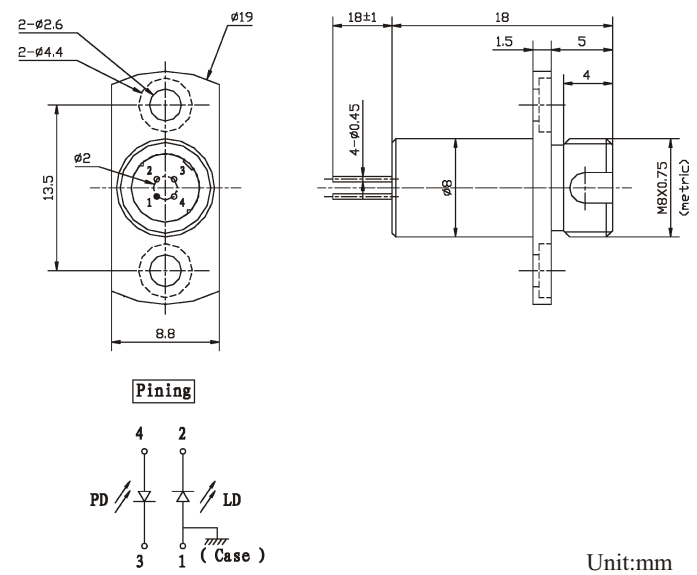

Unit:mm

Ordering Information

PT3344 − □□ − □ − □ FC

Data Rate
3: ~155Mb/s
4: ~622Mb/s
5: ~1.25Gb/s
6: ~2.5Gb/s

Receptacle Type
FC：FC/PC Receptacle

Output Power
11：0.3~0.5mW
12：0.5~1.0mW

Flange & Mounting Bracket Type
2:Rectangular flange