POWERTIP

PC 1602-J

OUTLINE DIMENSION & BLOCK DIAGRAM

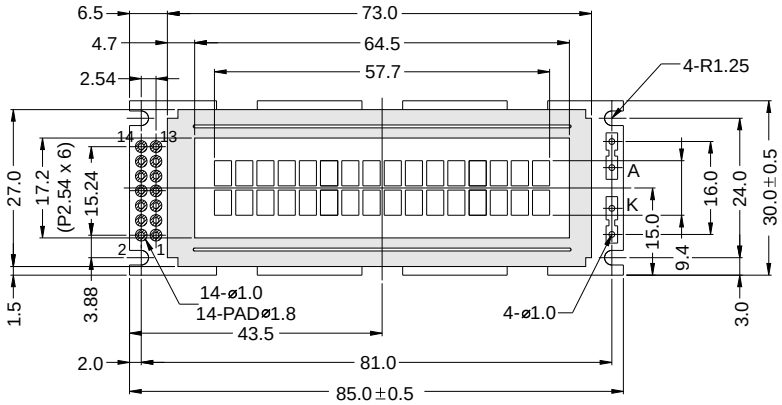

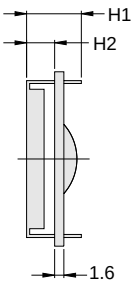

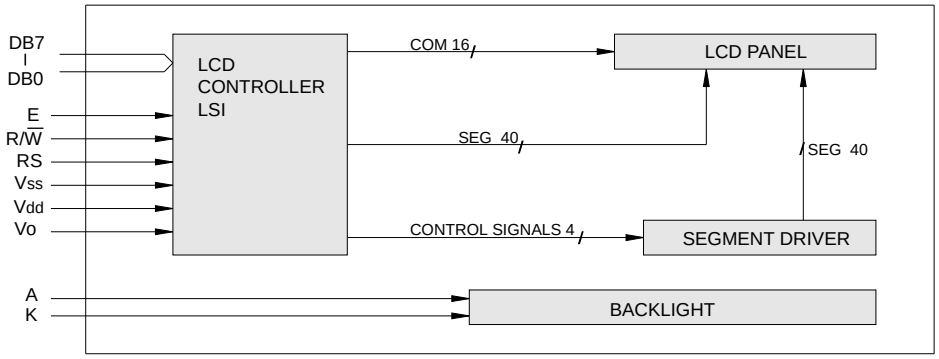

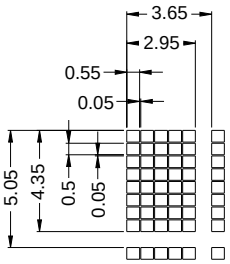

The tolerance unless classified ±0.3mm

MECHANICAL SPECIFICATION			
Overall Size	85.0 x 30.0	Module	H2 / H1
View Area	64.5 x 17.2	W /O B/L	4.8 / 9.4
Dot Size	0.55 x 0.50	EL B/L	4.8 / 9.4
Dot Pitch	0.60 x 0.55	LED B/L	9.0 / 13.1

PIN ASSIGNMENT		
Pin no.	Symbol	Function
1	Vss	Power supply(GND)
2	Vdd	Power supply(+)
3	Vo	Contrast Adjust
4	RS	Register select signal
5	R/W	Data read / write
6	E	Enable signal
7	DB0	Data bus line
8	DB1	Data bus line
9	DB2	Data bus line
10	DB3	Data bus line
11	DB4	Data bus line
12	DB5	Data bus line
13	DB6	Data bus line
14	DB7	Data bus line

ABSOLUTE MAXIMUM RATING					
Item	Symbol	Condition	Min.	Max.	Units
Supply for logic voltage	Vdd-Vss	25°C	-0.3	7	V
LCD driving supply voltage	Vdd-Vee	25°C	-0.3	13	V
Input voltage	Vin	25°C	-0.3	Vdd+0.3	V

ELECTRICAL CHARACTERISTICS									
Item	Symbol	Condition	Min.		Typical		Max.		Units
Power supply voltage	Vdd-Vss	25°C	2.7		–		4.5		V
LCD operation voltage	Vop	Top	N	W	N	W	N	W	V
		-20°C	–	7.1	–	7.5	–	7.9	V
		0°C	4.5	–	4.8	–	5.1	–	V
		25°C	4.1	6.1	4.4	6.4	4.7	6.7	V
		50°C	3.8	–	4.1	–	4.4	–	V
		70°C	–	5.7	–	6	–	6.3	V
LCM current consumption (No B/L)	Idd	Vdd=5V	–		2		3		mA
Backlight current consumption	LED/edge	VB/L=4.2V	–		40		–		mA
	LED/array	VB/L=4.2V	–		110		–		mA

REMARK

LCD option: STN, TN, FSTN

Backlight Option: LED,EL Backlight feature, other Specs not available on catalog is under request.