P/N	K181TC-5250S

Alternative Connectors

.SMA Reverse Polarity Plug(female)

P/N: K181TR-5250S

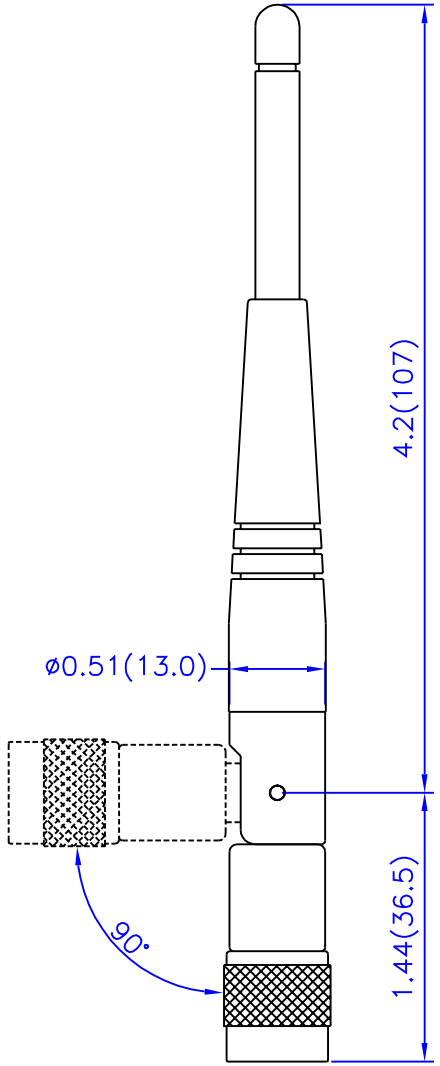

Electrical Properties:

Frequency Range:	5.150~5.350 GHz
Impedance:	50Ω nominal
VSWR:	<2.0:1
Gain:	5 dBi
Radiation:	Omni
Polarization:	Vertical

Mechanical Properties:

Connector:	TNC Plug(male)
Material:	
Whip:	Polyurethene(Black)
Swivel Mechanism:	Polyurethene(Black)
Connector:	Brass with black chrome plating
Operation Temp.:	−20°C to +65°C
Storage Temp.:	−30°C to +75°C

TITLE	5 GHz Swivel Antenna 152 model	VER Preliminary
UNIT in.(mm)	DWG. NO. K181TC-5250S	
SCALE 1:1	NEARSON	

http://www.nearson.com