JM201A

20 CHAR×1LINE
1/ 16 DUTY,1/5 BIAS

1 EXTERNAL DIMENSION

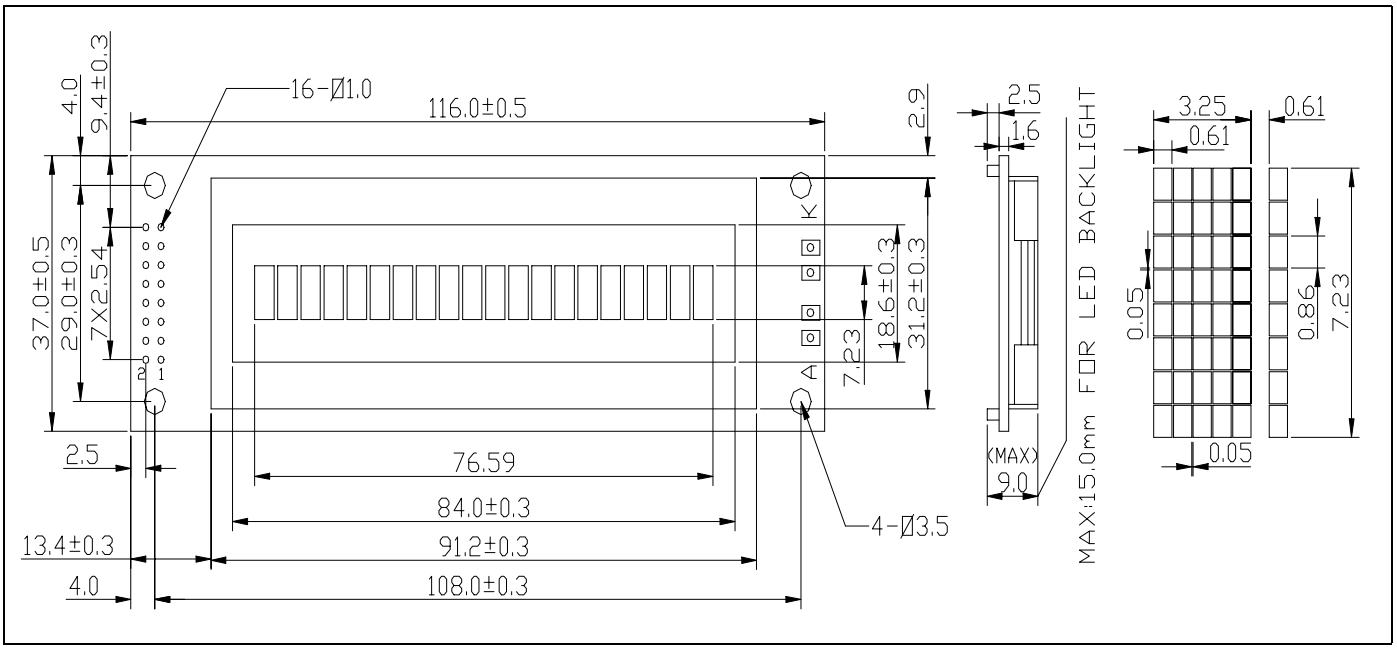

2 MECHANICAL DATA

ITEM	SPECIFICATION	UNIT
Module Size (W×H×T)	116.0×37.0×9.0(LED:15.0)	mm
Viewing Area (W×H)	84.0×18.6	mm
Character Font(W×H)	5×7+cursor	dots
Character Size (W×H)	3.25×7.23	mm
Character Pitch(W×H)	3.86	mm
Dot Size(W×H)	0.61×0.86	mm

3 PIN CONNECTIONS

PIN	SYMBOL	SIGNAL DESCRIPTION
1	GND	Power Supply: 0V
2	Vdd	Power Supply: +5V
3	V5	Power Supply for LCD
4	RS	Register Select(H=DATA,L=Instruction)
5	R/W	Read/Write L=MPU to LCM,H=LCM to MPU
6	E	Enable
7 to 14	DB0 to DB7	Data Bus for 4 bit or 8 bit Mode
15	A	Anode of LED Unit
16	K	Cathode of LED Unit

4 BLOCK DIAGRAM

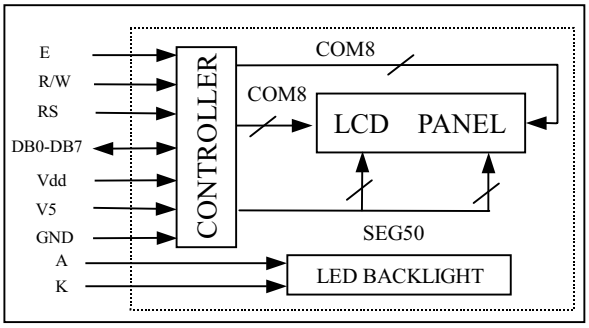

5 ABSOLUTE MAXIMUM RATINGS

PARAMETER	SYMBOL	MIN.	MAX.	UNIT
Supply Voltage	Vdd	-0.3	7	V
LCD Supply Voltage	V5	Vdd-13.5	0	V
Input Voltage	Vi	-0.3	Vdd+0.3	V
Operating Temperature	Top	0	50	℃
Storage Temperature	Tstg	-20	70	℃

6 ELECTRICAL CHARACTERISTICS(Ta=25℃)

ITEM	SYMBOL	CONDITION	MIN.	TYP.	MAX.	UNIT
Supply Voltage(logic)	Vdd-GND	-	4.5	5.0	5.5	V
Supply Current(logic)	Idd	Vdd=5.0V	-	1.5	3.0	mA
Driving Current(LCD)	Iee		-	0.4	1.0	mA
Driving Voltage(LCD)	Vdd-V5		3.8	4.5	4.9	V
Input Voltage “H”	Vih		2.2	-	Vdd	V
Input Voltage “L”	Vil		-0.3	-	0.6	V
Output Voltage “H”	Voh	Ioh=-0.205mA	2.4	-	-	V
Output Voltage “L”	Vol	Iol=1.2mA	-	-	0.4	V

7 BOTTOM BACKLIGHT CHARACTERS(Ta=25℃)

PARAMETER	SYMBOL	CONDITION	MIN.	TYP.	MAX.	UNIT
Supply Voltage	V_{LED}	-	-	4.1	-	V
LED Forward Consumption Current	If	Ta=25℃ Vf=4.1V	-	115	-	mA
LED Allowable Dissipation	Pd	-	-	480	-	mW