HM62V16258CI Series

Wide Temperature Range Version
4 M SRAM (256-kword × 16-bit)

HITACHI

ADE-203-1109A (Z)
Preliminary
Rev. 0.1
Oct. 21, 1999

Description

The Hitachi HM62V16258CI Series is 4-Mbit static RAM organized 262,144-word × 16-bit. HM62V16258CI Series has realized higher density, higher performance and low power consumption by employing Hi-CMOS process technology. It offers low power standby power dissipation; therefore, it is suitable for battery backup systems. It is packaged in standard 44-pin plastic TSOPII.

Features

- Single 2.5 V and 3.0 V supply: 2.2 V to 3.6 V
- Fast access time: 70 ns (max)
- Power dissipation:
  - — Active: TBD (typ)
  - — Standby: 2.4 μW (typ)
- Completely static memory.
  - — No clock or timing strobe required
- Equal access and cycle times
- Common data input and output.
  - — Three state output
- Battery backup operation.
- Temperature range: –40 to +85°C

Preliminary: The specification of this device are subject to change without notice. Please contact your nearest Hitachi's Sales Dept. regarding specification.

Hitachi semiconductor

Ordering Information

Type No.	Access time	Package
HM62V16258CLTTI-7	70 ns	400-mil 44-pin plastic TSOPII (normal-bend type) (TTP-44DB)

Pin Arrangement

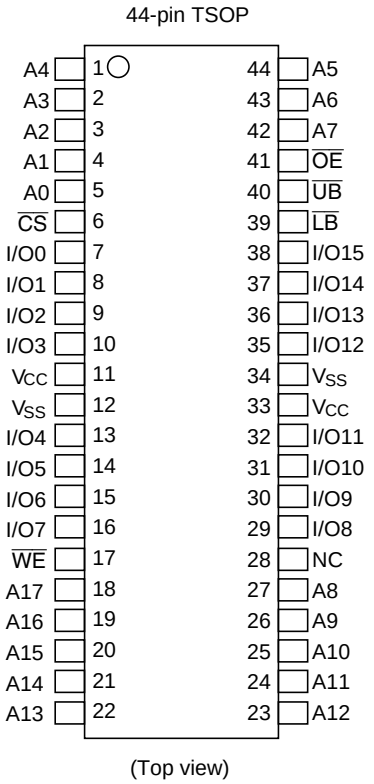

Pin Description

Pin name	Function
A0 to A17	Address input
I/O0 to I/O15	Data input/output
$\overline{CS}$	Chip select
$\overline{WE}$	Write enable
$\overline{OE}$	Output enable
$\overline{LB}$	Lower byte select
$\overline{UB}$	Upper byte select
V_{CC}	Power supply
V_{SS}	Ground
NC	No connection

Block Diagram

TBD

Operation Table

$\overline{CS}$	$\overline{WE}$	$\overline{OE}$	$\overline{UB}$	$\overline{LB}$	I/O0 to I/O7	I/O8 to I/O15	Operation
H	×	×	×	×	High-Z	High-Z	Standby
×	×	×	H	H	High-Z	High-Z	Standby
L	H	L	L	L	Dout	Dout	Read
L	H	L	H	L	Dout	High-Z	Lower byte read
L	H	L	L	H	High-Z	Dout	Upper byte read
L	L	×	L	L	Din	Din	Write
L	L	×	H	L	Din	High-Z	Lower byte write
L	L	×	L	H	High-Z	Din	Upper byte write
L	H	H	×	×	High-Z	High-Z	Output disable

Note: H: V_{IH}, L: V_{IL}, ×: V_{IH} or V_{IL}

Absolute Maximum Ratings

Parameter	Symbol	Value	Unit
Power supply voltage relative to V_{SS}	V_{CC}	–0.5 to + 4.6	V
Terminal voltage on any pin relative to V_{SS}	V_T	–0.5*[1] to V_{CC} + 0.3*[2]	V
Power dissipation	P_T	1.0	W
Storage temperature range	Tstg	–55 to +125	°C
Storage temperature range under bias	Tbias	–40 to +85	°C

Notes: 1. V_T min: –3.0 V for pulse half-width ≤ 30 ns.
2. Maximum voltage is +4.6 V.

DC Operating Conditions

Parameter		Symbol	Min	Typ	Max	Unit	Note
Supply voltage		V_{CC}	2.2	2.5/3.0	3.6	V	
		V_{SS}	0	0	0	V	
Input high voltage	V_{CC} = 2.2 V to 2.7 V	V_{IH}	2.0	—	V_{CC} + 0.3	V	
	V_{CC} = 2.7 V to 3.6 V	V_{IH}	2.2	—	V_{CC} + 0.3	V	
Input low voltage	V_{CC} = 2.2 V to 2.7 V	V_{IL}	–0.2	—	0.4	V	1
	V_{CC} = 2.7 V to 3.6 V	V_{IL}	–0.3	—	0.6	V	1
Ambient temperature range		Ta	–40	—	85	°C	

Note: 1. V_{IL} min: –3.0 V for pulse half-width ≤ 30 ns.

DC Characteristics

Parameter		Symbol	Min	Typ*[1]	Max	Unit	Test conditions
Input leakage current		$\|I_{LI}\|$	—	—	1	µA	Vin = V_{SS} to V_{CC}
Output leakage current		$\|I_{LO}\|$	—	—	1	µA	$\overline{CS}$ = V_{IH} or $\overline{OE}$ = V_{IH} or $\overline{WE}$ = V_{IL} or, $\overline{LB}$ = $\overline{UB}$ = V_{IH}, $V_{I/O}$ = V_{SS} to V_{CC}
Operating current		I_{CC}	—	—	20	mA	$\overline{CS}$ = V_{IL}, Others = V_{IH}/V_{IL}, $I_{I/O}$ = 0 mA
Average operating current		I_{CC1}	—	—	25	mA	Min. cycle, duty = 100%, $I_{I/O}$ = 0 mA, $\overline{CS}$ = V_{IL}, Others = V_{IH}/V_{IL}
		I_{CC2}	—	—	5	mA	Cycle time = 1 µs, duty = 100%, $I_{I/O}$ = 0 mA, $\overline{CS}$ ≤ 0.2 V, V_{IH} ≥ V_{CC} – 0.2 V, V_{IL} ≤ 0.2 V
Standby current		I_{SB}	—	0.1	0.3	mA	$\overline{CS}$ = V_{IH}
Standby current		I_{SB1}*[2]	—	0.8	30	µA	0 V ≤ Vin $\overline{CS}$ ≥ V_{CC} – 0.2 V
Output high voltage	V_{CC} =2.2 V to 2.7 V	V_{OH}	2.0	—	—	V	I_{OH} = –0.5 mA
	V_{CC} =2.7 V to 3.6 V	V_{OH}	2.4	—	—	V	I_{OH} = –1 mA
	V_{CC} =2.2 V to 3.6 V	V_{OH}	V_{CC} – 0.2	—	—	V	I_{OH} = –100 µA
Output low voltage	V_{CC} =2.2 V to 2.7 V	V_{OL}	—	—	0.4	V	I_{OL} = 0.5 mA
	V_{CC} =2.7 V to 3.6 V	V_{OL}	—	—	0.4	V	I_{OL} = 2 mA
	V_{CC} =2.2 V to 3.6 V	V_{OL}	—	—	0.2	V	I_{OL} = 100 µA

Notes: 1. Typical values are at V_{CC} = 2.5 V/3.0 V, Ta = +25°C and not guaranteed.
2. This characteristic is guaranteed only for L version.

Capacitance (Ta = +25°C, f = 1.0 MHz)

Parameter	Symbol	Min	Typ	Max	Unit	Test conditions	Note
Input capacitance	Cin	—	—	8	pF	Vin = 0 V	1
Input/output capacitance	$C_{I/O}$	—	—	10	pF	$V_{I/O}$ = 0 V	1

Note: 1. This parameter is sampled and not 100% tested.

AC Characteristics (Ta = –40 to +85°C, V_{CC} = 2.2 V to 3.6 V, unless otherwise noted.)

Test Conditions

- Input pulse levels: V_{IL} = 0.4 V, V_{IH} = 2.2 V (V_{CC} = 2.2 V to 2.7 V)
  V_{IL} = 0.4 V, V_{IH} = 2.4 V (V_{CC} = 2.7 V to 3.6 V)
- Input rise and fall time: 5 ns
- Input and output timing reference levels: 1.1 V (V_{CC} = 2.2 V to 2.7 V)
  1.4 V (V_{CC} = 2.7 V to 3.6 V)
- Output load: See figures (Including scope and jig)

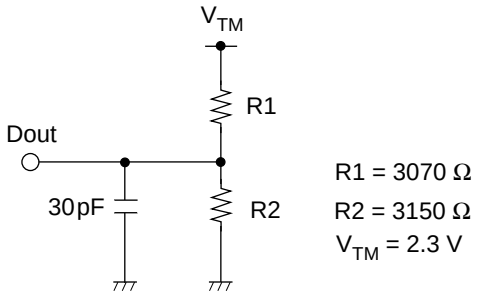

Output load (A)
(V_{CC} = 2.2 V to 2.7 V)

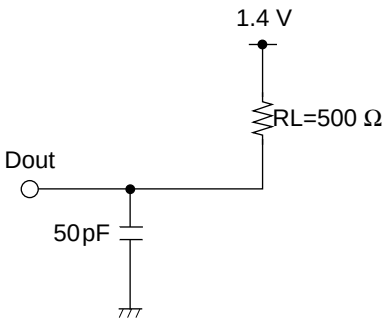

Output load (B)
(V_{CC} = 2.7 V to 3.6 V)

Read Cycle

		HM62V16258CI			
		-7			
Parameter	**Symbol**	**Min**	**Max**	**Unit**	**Notes**
Read cycle time	t_{RC}	70	—	ns	
Address access time	t_{AA}	—	70	ns	
Chip select access time	t_{ACS}	—	70	ns	
Output enable to output valid	t_{OE}	—	40	ns	
Output hold from address change	t_{OH}	10	—	ns	
$\overline{LB}$, $\overline{UB}$ access time	t_{BA}	—	70	ns	
Chip select to output in low-Z	t_{CLZ}	10	—	ns	2, 3
$\overline{LB}$, $\overline{UB}$ enable to low-z	t_{BLZ}	5	—	ns	2, 3
Output enable to output in low-Z	t_{OLZ}	5	—	ns	2, 3
Chip deselect to output in high-Z	t_{CHZ}	0	25	ns	1, 2, 3
$\overline{LB}$, $\overline{UB}$ disable to high-Z	t_{BHZ}	0	25	ns	1, 2, 3
Output disable to output in high-Z	t_{OHZ}	0	25	ns	1, 2, 3

Write Cycle

		HM62V16258CI			
		-7			
Parameter	**Symbol**	**Min**	**Max**	**Unit**	**Notes**
Write cycle time	t_{WC}	70	—	ns	
Address valid to end of write	t_{AW}	60	—	ns	
Chip selection to end of write	t_{CW}	60	—	ns	5
Write pulse width	t_{WP}	50	—	ns	4
$\overline{LB}$, $\overline{UB}$ valid to end of write	t_{BW}	55	—	ns	
Address setup time	t_{AS}	0	—	ns	6
Write recovery time	t_{WR}	0	—	ns	7
Data to write time overlap	t_{DW}	30	—	ns	
Data hold from write time	t_{DH}	0	—	ns	
Output active from end of write	t_{OW}	5	—	ns	2
Output disable to output in High-Z	t_{OHZ}	0	25	ns	1, 2
Write to output in high-Z	t_{WHZ}	0	25	ns	1, 2

Notes:
1. t_{CHZ}, t_{OHZ}, t_{WHZ} and t_{BHZ} are defined as the time at which the outputs achieve the open circuit conditions and are not referred to output voltage levels.
2. This parameter is sampled and not 100% tested.
3. At any given temperature and voltage condition, t_{HZ} max is less than t_{LZ} min both for a given device and from device to device.
4. A write occures during the overlap of a low $\overline{CS}$, a low $\overline{WE}$ and a low $\overline{LB}$ or a low $\overline{UB}$. A write begins at the latest transition among $\overline{CS}$ going low, $\overline{WE}$ going low and $\overline{LB}$ going low or $\overline{UB}$ going low. A write ends at the earliest transition among $\overline{CS}$ going high, $\overline{WE}$ going high and $\overline{LB}$ going high or $\overline{UB}$ going high. t_{WP} is measured from the beginning of write to the end of write.
5. t_{CW} is measured from the later of $\overline{CS}$ going low to the end of write.
6. t_{AS} is measured from the address valid to the beginning of write.
7. t_{WR} is measured from the earliest of $\overline{CS}$ or $\overline{WE}$ going high to the end of write cycle.

Timing Waveform

Read Cycle

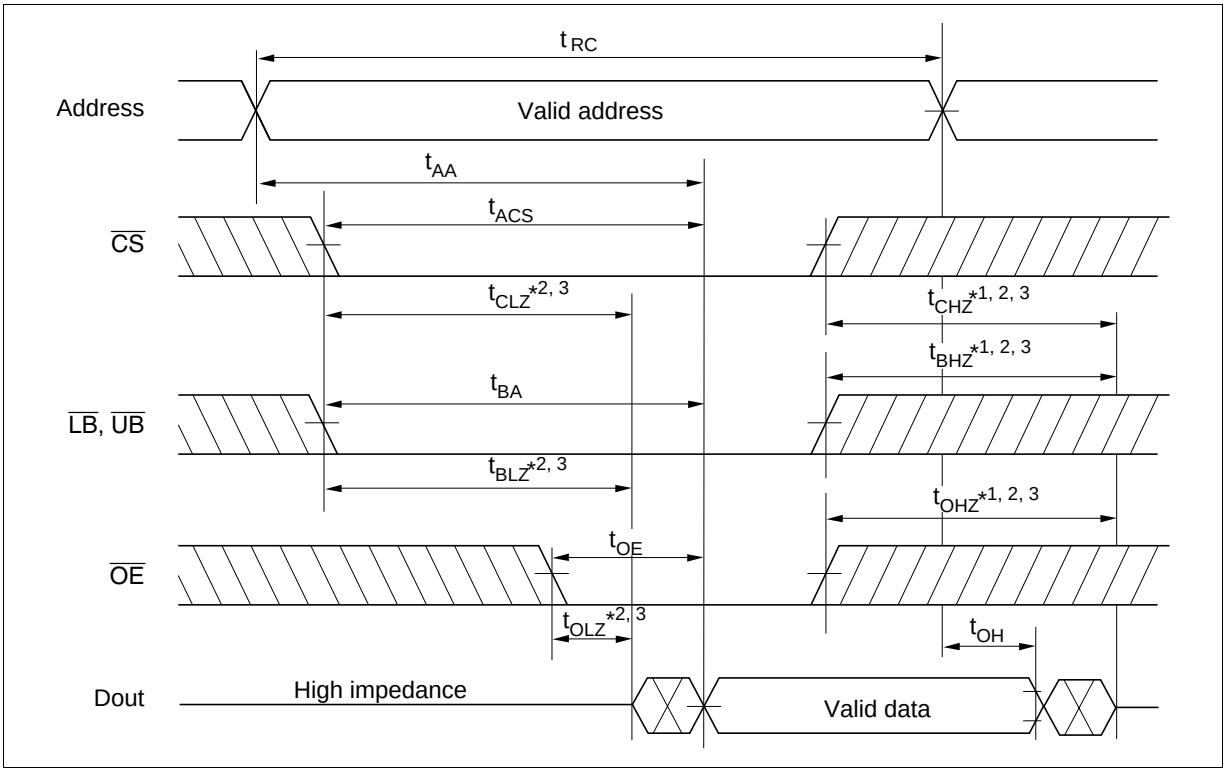

Write Cycle (1) ($\overline{WE}$ Clock)

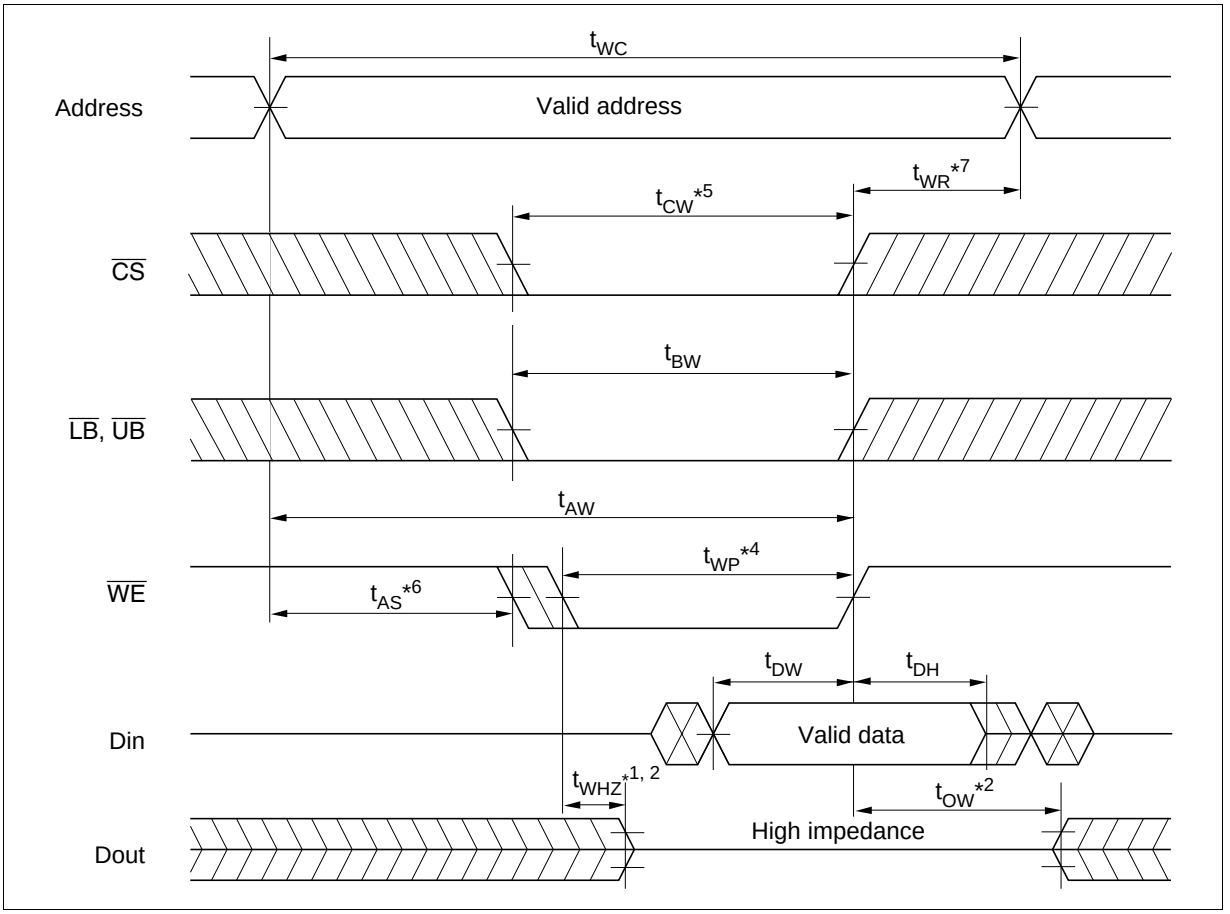

Write Cycle (2) ($\overline{CS}$ Clock, $\overline{OE}$ = V_{IH})

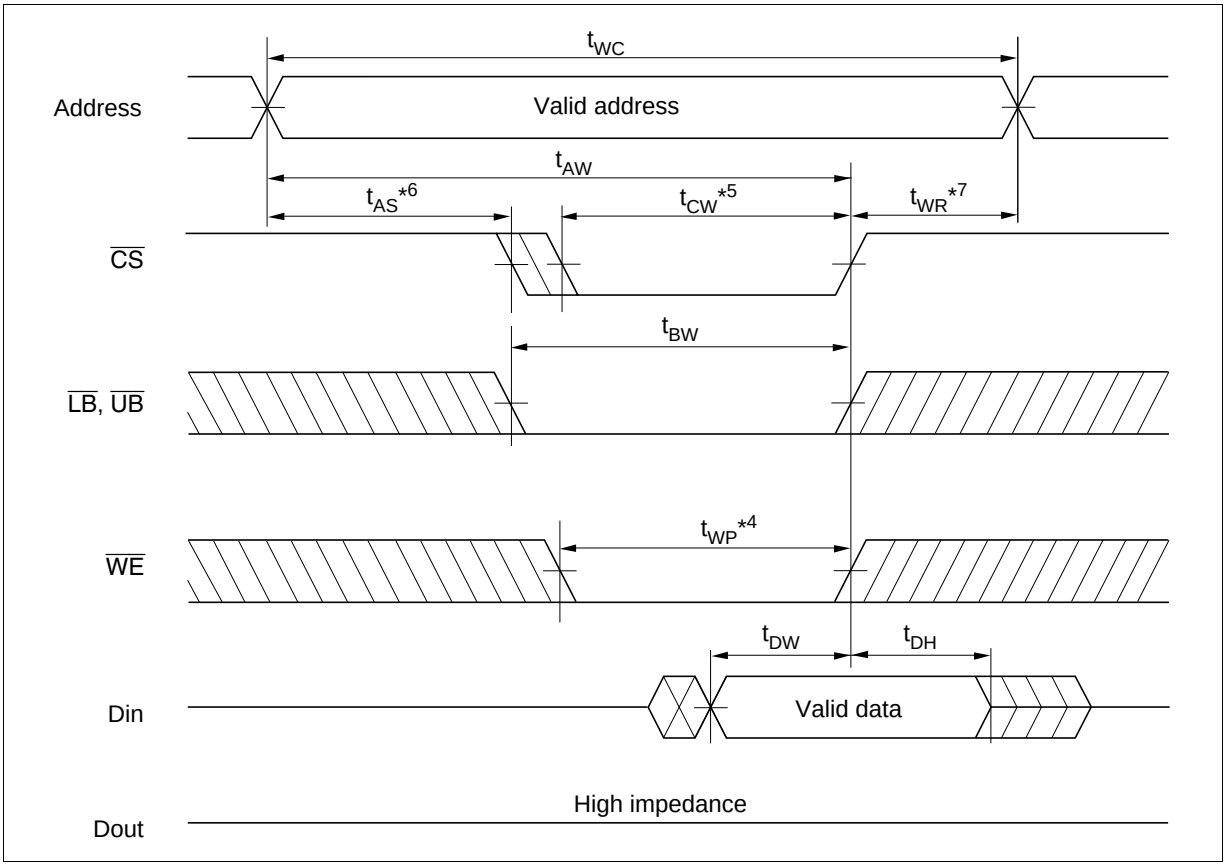

Write Cycle (3) ($\overline{LB}$, $\overline{UB}$ Clock, $\overline{OE}$ = V_{IH})

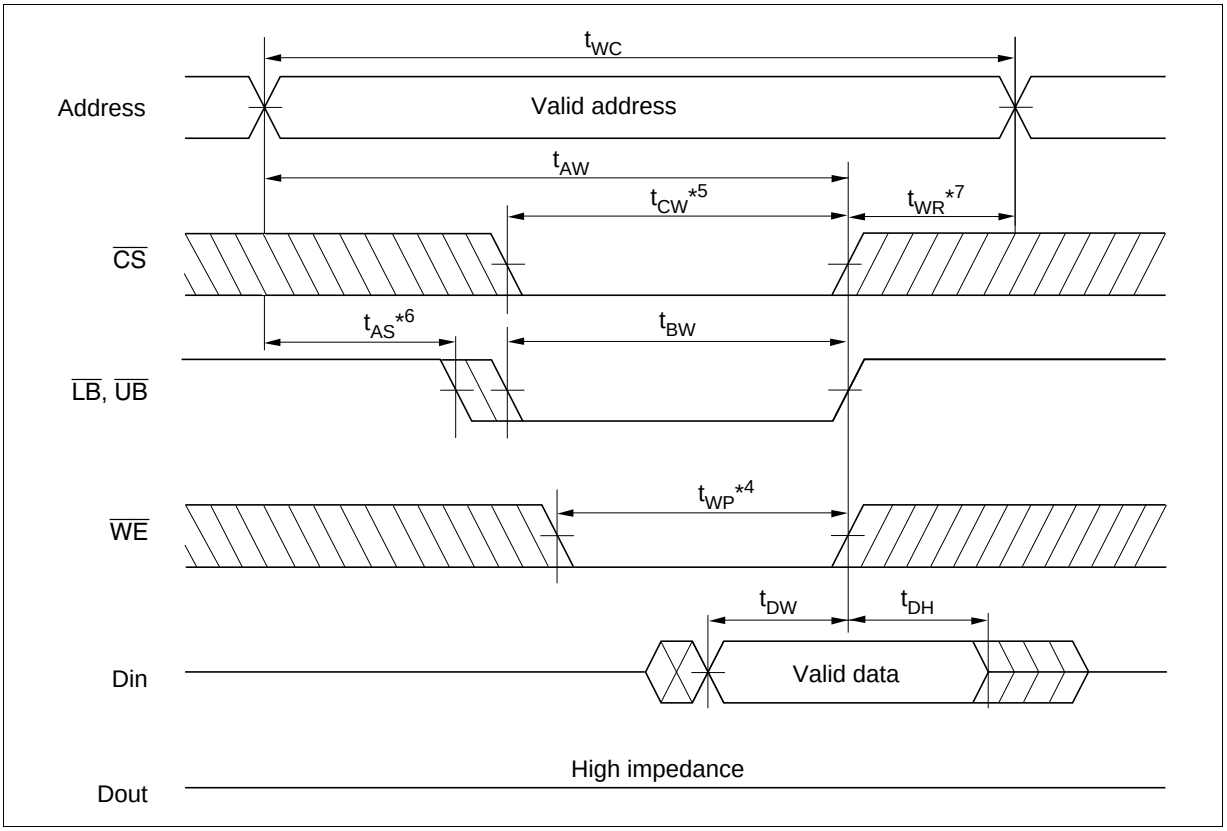

Low V_{CC} Data Retention Characteristics (Ta = –40 to +85°C)

Parameter	Symbol	Min	Typ*[3]	Max	Unit	Test conditions*[2]
V_{CC} for data retention	V_{DR}	2.0	—	3.6	V	Vin ≥ 0V (1) $\overline{CS}$ ≥ V_{CC} – 0.2 V or (2) $\overline{LB}$ = $\overline{UB}$ ≥ V_{CC} – 0.2 V $\overline{CS}$ ≤ 0.2 V
Data retention current	I_{CCDR} *[1]	—	0.8	20	µA	V_{CC} = 3.0 V, Vin ≥ 0V (1) $\overline{CS}$ ≥ V_{CC} – 0.2 V or (2) $\overline{LB}$ = $\overline{UB}$ ≥ V_{CC} – 0.2 V $\overline{CS}$ ≤ 0.2 V
Chip deselect to data retention time	t_{CDR}	0	—	—	ns	See retention waveform
Operation recovery time	t_R	t_{RC}*[4]	—	—	ns	

Notes:
1. This characteristic is guaranteed only for L-version, 10 µA max. at Ta = 0 to +40°C.
2. $\overline{CS}$ controls address buffer, $\overline{WE}$ buffer, $\overline{OE}$ buffer, $\overline{LB}$, $\overline{UB}$ buffer and Din buffer. If $\overline{CS}$ controls data retention mode, Vin levels (address, $\overline{WE}$, $\overline{OE}$, $\overline{LB}$, $\overline{UB}$, I/O) can be in the high impedance state. If $\overline{LB}$, $\overline{UB}$ controls data retention mode, $\overline{LB}$, $\overline{UB}$ must be $\overline{LB}$ = $\overline{UB}$ ≥ V_{CC} – 0.2 V, $\overline{CS}$ must be $\overline{CS}$ ≤ 0.2 V. The other input levels (address, $\overline{WE}$, $\overline{OE}$, I/O) can be in the high impedance state.
3. Typical values are at V_{CC} = 3.0 V, Ta = +25°C and not guaranteed.
4. t_{RC} = read cycle time.

Low V_{CC} Data Retention Timing Waveform (1) ($\overline{CS}$ Controlled) **(**V_{CC} = 2.2 V to 2.7 V)

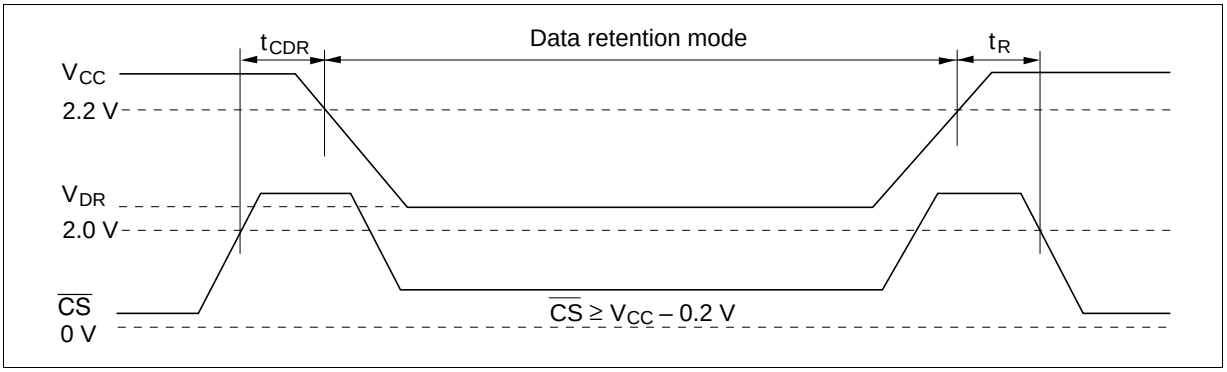

Low V_{CC} Data Retention Timing Waveform (1) ($\overline{CS}$ Controlled) **(**V_{CC} = 2.7 V to 3.6 V)

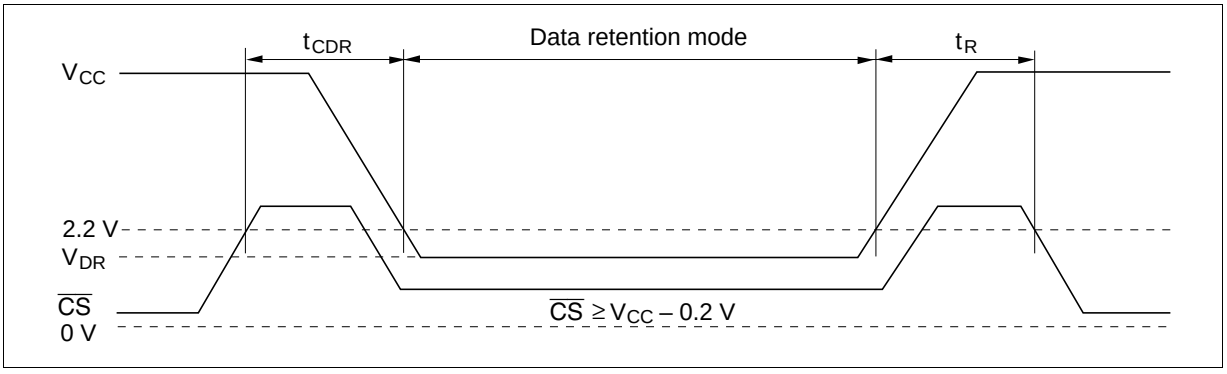

Low V_{CC} Data Retention Timing Waveform (2) ($\overline{LB}$, $\overline{UB}$ Controlled) **(**V_{CC} = 2.2 V to 2.7 V)

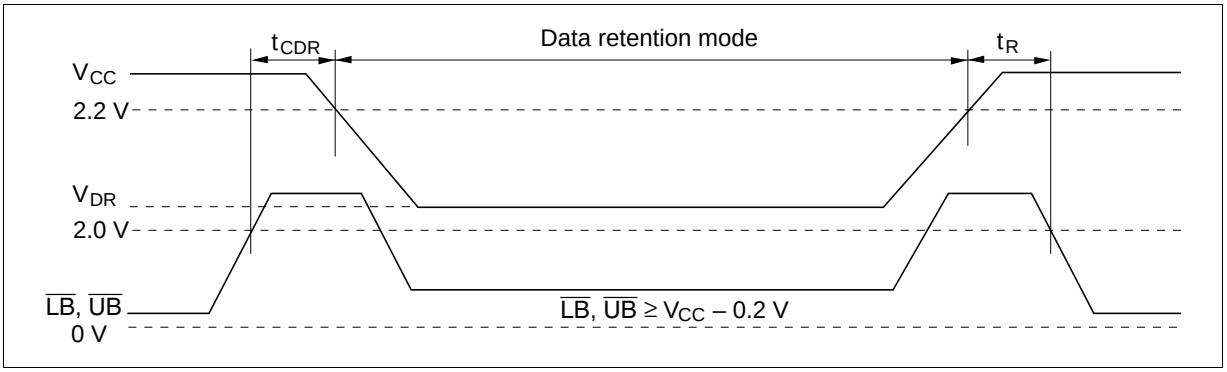

Low V_{CC} Data Retention Timing Waveform (2) ($\overline{LB}$, $\overline{UB}$ Controlled) **(**V_{CC} = 2.7 V to 3.6 V)

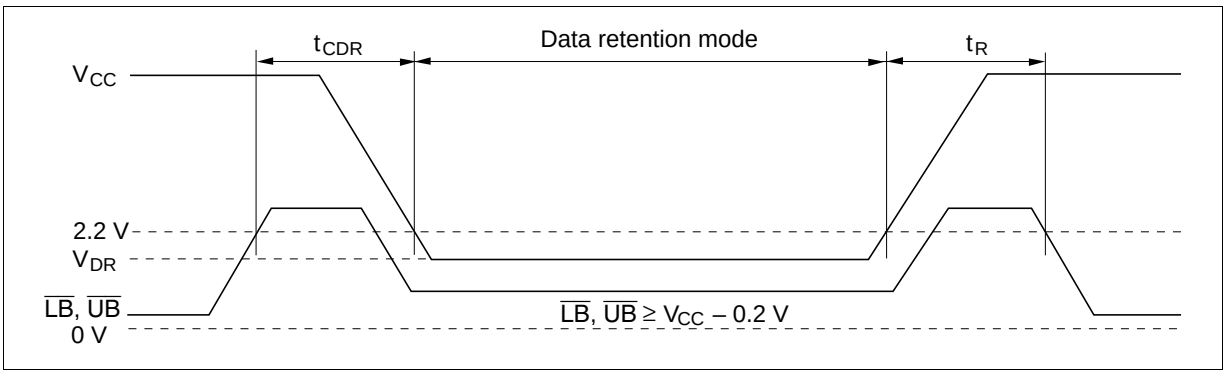

Package Dimensions

HM62V16258CLTTI Series (TTP-44DB)

Unit: mm

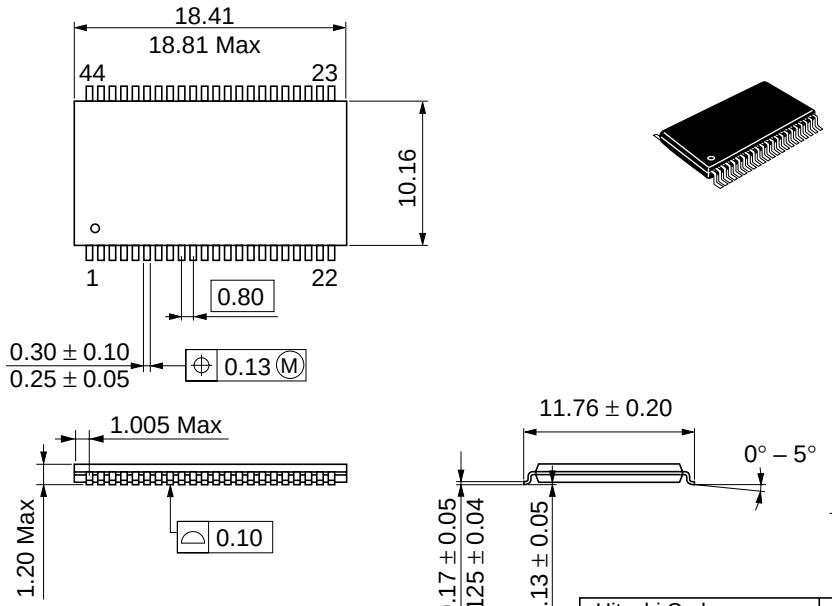

Dimension including the plating thickness
Base material dimension

Hitachi Code	TTP-44DB
JEDEC	—
EIAJ	—
Weight (reference value)	0.43 g

Cautions

1. Hitachi neither warrants nor grants licenses of any rights of Hitachi's or any third party's patent, copyright, trademark, or other intellectual property rights for information contained in this document. Hitachi bears no responsibility for problems that may arise with third party's rights, including intellectual property rights, in connection with use of the information contained in this document.
2. Products and product specifications may be subject to change without notice. Confirm that you have received the latest product standards or specifications before final design, purchase or use.
3. Hitachi makes every attempt to ensure that its products are of high quality and reliability. However, contact Hitachi's sales office before using the product in an application that demands especially high quality and reliability or where its failure or malfunction may directly threaten human life or cause risk of bodily injury, such as aerospace, aeronautics, nuclear power, combustion control, transportation, traffic, safety equipment or medical equipment for life support.
4. Design your application so that the product is used within the ranges guaranteed by Hitachi particularly for maximum rating, operating supply voltage range, heat radiation characteristics, installation conditions and other characteristics. Hitachi bears no responsibility for failure or damage when used beyond the guaranteed ranges. Even within the guaranteed ranges, consider normally foreseeable failure rates or failure modes in semiconductor devices and employ systemic measures such as fail-safes, so that the equipment incorporating Hitachi product does not cause bodily injury, fire or other consequential damage due to operation of the Hitachi product.
5. This product is not designed to be radiation resistant.
6. No one is permitted to reproduce or duplicate, in any form, the whole or part of this document without written approval from Hitachi.
7. Contact Hitachi's sales office for any questions regarding this document or Hitachi semiconductor products.

HITACHI

Hitachi, Ltd.
Semiconductor & Integrated Circuits.
Nippon Bldg., 2-6-2, Ohte-machi, Chiyoda-ku, Tokyo 100-0004, Japan
Tel: Tokyo (03) 3270-2111 Fax: (03) 3270-5109

URL	NorthAmerica	:	http:semiconductor.hitachi.com/
	Europe	:	http://www.hitachi-eu.com/hel/ecg
	Asia (Singapore)	:	http://www.has.hitachi.com.sg/grp3/sicd/index.htm
	Asia (Taiwan)	:	http://www.hitachi.com.tw/E/Product/SICD_Frame.htm
	Asia (HongKong)	:	http://www.hitachi.com.hk/eng/bo/grp3/index.htm
	Japan	:	http://www.hitachi.co.jp/Sicd/indx.htm

For further information write to:

Hitachi Semiconductor (America) Inc.
179 East Tasman Drive,
San Jose,CA 95134
Tel: <1> (408) 433-1990
Fax: <1>(408) 433-0223

Hitachi Europe GmbH
Electronic components Group
Dornacher Straße 3
D-85622 Feldkirchen, Munich
Germany
Tel: <49> (89) 9 9180-0
Fax: <49> (89) 9 29 30 00

Hitachi Europe Ltd.
Electronic Components Group.
Whitebrook Park
Lower Cookham Road
Maidenhead
Berkshire SL6 8YA, United Kingdom
Tel: <44> (1628) 585000
Fax: <44> (1628) 778322

Hitachi Asia Pte. Ltd.
16 Collyer Quay #20-00
Hitachi Tower
Singapore 049318
Tel: 535-2100
Fax: 535-1533

Hitachi Asia Ltd.
Taipei Branch Office
3F, Hung Kuo Building. No.167,
Tun-Hwa North Road, Taipei (105)
Tel: <886> (2) 2718-3666
Fax: <886> (2) 2718-8180

Hitachi Asia (Hong Kong) Ltd.
Group III (Electronic Components)
7/F., North Tower, World Finance Centre,
Harbour City, Canton Road, Tsim Sha Tsui,
Kowloon, Hong Kong
Tel: <852> (2) 735 9218
Fax: <852> (2) 730 0281
Telex: 40815 HITEC HX

Copyright © Hitachi, Ltd., 1998. All rights reserved. Printed in Japan.

Revision Record

Rev.	Date	Contents of Modification	Drawn by	Approved by
0.0	Sep. 3, 1999	Initial issue	Y. Saitoh	K. Imato
0.1	Oct. 21, 1999	Low V_{CC} Data Retention Characteristics Change of Timing Waveform(1) and (2)		