# HDM16116H-H

## Dimensional Drawing

16 Character x 1 Line, 2 Row connector

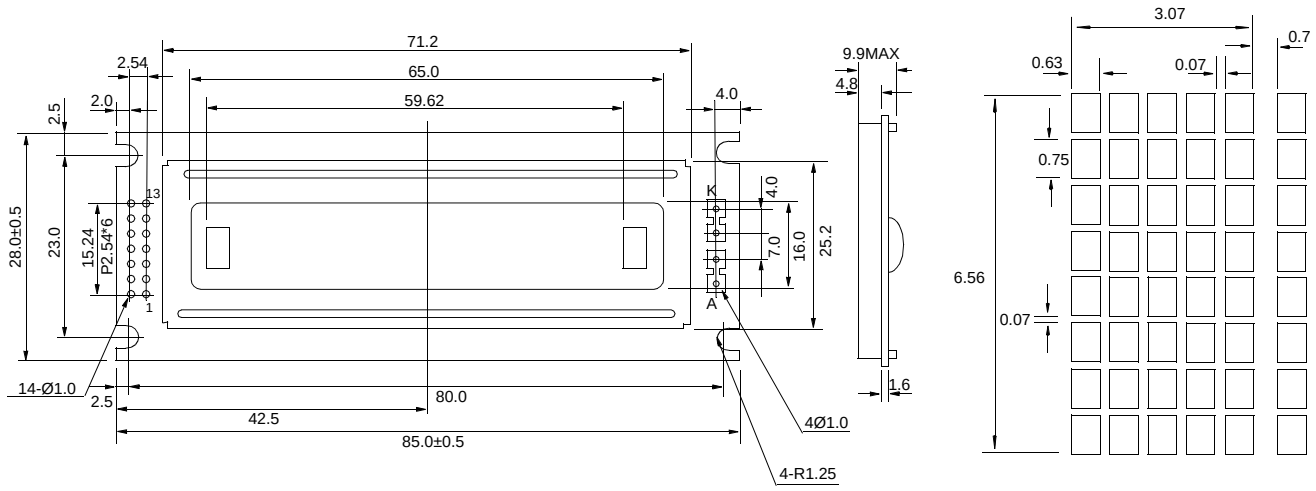


Dimension tolerance: +/-0.3mm

## Features

Character Format .....5x7 Dots with Cursor
Backlight.....EL Optional
Options..TN/Gray STN/Yellow STN, 12 o'Clock/6 o'Clock View
Normal/Extended Temperature
Normal/Negative Displays

## Physical Data

Module Size.....85.0W x 28.0H x 9.9T mm
Viewing Area Size.....65.0W x 16.0H mm
Weight.....25g

## Block Diagram

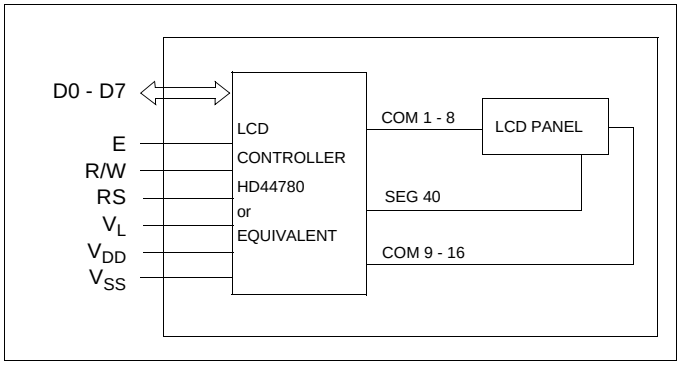


## Absolute Maximum Ratings

| PARAMETER | SYMBOL | MIN | MAX | UNIT |
|---|---|---|---|---|
| SUPPLY VOLTAGE | $V_{DD}$-$V_{SS}$ | 0 | 7.0 | V |
| SUPPLY VOLTAGE FOR LCD | $V_{DD}$-$V_L$ | 0 | 13.5 | V |
| INPUT VOLTAGE | $V_{IN}$ | $V_{SS}$ | $V_{DD}$ | V |
| OPERATING TEMPERATURE | $T_{OP}$ | 0 | 50 | °C |
| STORAGE TEMPERATURE | $T_{STG}$ | -20 | 70 | °C |

## Electrical Characteristics (VDD=5.0±0.25V 25°C)

| PARAMETER | SYM | CONDITION | MIN | TYP | MAX | UNIT |
|---|---|---|---|---|---|---|
| INPUT HIGH VOLTAGE | $V_{IH}$ | - | 2.2 | - | - | V |
| INPUT LOW VOLTAGE | $V_{IL}$ | - | - | - | .6 | V |
| OUTPUT HIGH VOLTAGE | $V_{OH}$ | $I_{OH}$=0.2mA | 2.4 | - | - | V |
| OUTPUT LOW VOLTAGE | $V_{OL}$ | $I_{OL}$=1.2mA | - | - | 0.4 | V |
| POWER SUPPLY CURRENT | $I_{DD}$ | $V_{DD}$=5.0V | - | 1.0 | 2.2 | mA |
| POWER SUPPLY FOR LCD | $V_{DD}$-$V_L$ | TA=25°C | 4.3 | - | 4.7 | V |
| DRIVE METHOD | 1/16 Duty | | | | | |

## Pin Connections

| PIN NO. | SYMBOL | LEVEL | FUNCTION | |
|---|---|---|---|---|
| 1 | $V_{SS}$ | - | 0V | Power supply |
| 2 | $V_{DD}$ | - | 5V | |
| 3 | $V_L$ | - | - | |
| 4 | RS | H/L | H: Data input<br>L: Instruction data input | |
| 5 | R/W | H/L | H: Data read<br>L: Data write | |
| 6 | E | H,H→L | Enable signal | |
| 7 | D0 | H/L | Data bus | |
| 8 | D1 | H/L | | |
| 9 | D2 | H/L | | |
| 10 | D3 | H/L | | |
| 11 | D4 | H/L | | |
| 12 | D5 | H/L | | |
| 13 | D6 | H/L | | |
| 14 | D7 | H/L | | |