10/100 Base-X Module for Multi-port Applications

EPF8066SM

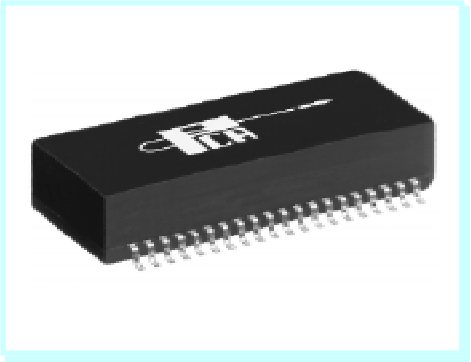

- Significantly improved Common Mode Attenuation •
- Guaranteed to operate with 8 mA DC bias at 70°C •
- Complies with or exceeds IEEE 802.3, 10 BT/100 BX Standards •

Electrical Parameters @ 25° C

OCL @ 70°C	Insertion Loss (dB Max.)						Return Loss (dB Min.)						Common Mode Rejection (dB Min.)								Crosstalk (dB Min.)
100 KHz, 0.1 Vrms 8 mA DC Bias	0.1-80 MHz		100 MHz		150 MHz		1-30 MHz		60 MHz		100 MHz		30-100 MHz		200 MHz		300 MHz		500 MHz		0.1-100 MHz
Media Side	Xmit	Rcv	Xmit	Rcv	Xmit	Rcv	Xmit	Rcv	Xmit	Rcv	Xmit	Rcv	Xmit	Rcv	Xmit	Rcv	Xmit	Rcv	Xmit	Rcv	
350µH	-1	-1	-1	-1	-3	-3	-18	-18	-12	-12	-10	-10	-30	-25	-25	-20	-20	-10	-15	---	-30

• **Isolation** : 1500 Vrms • **Impedance** : 100 ohms • **Rise Time** : 3.0 nS Max. •

Schematic

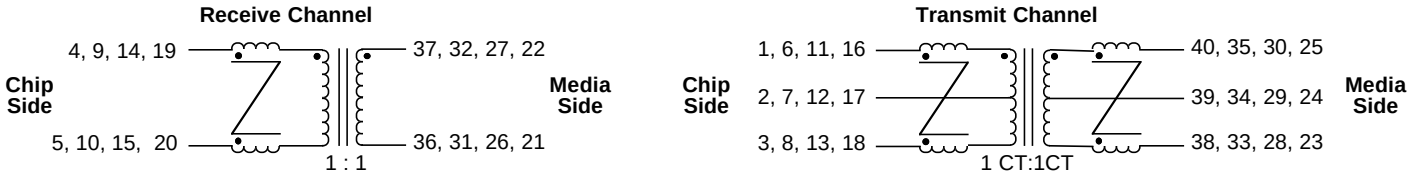

Package

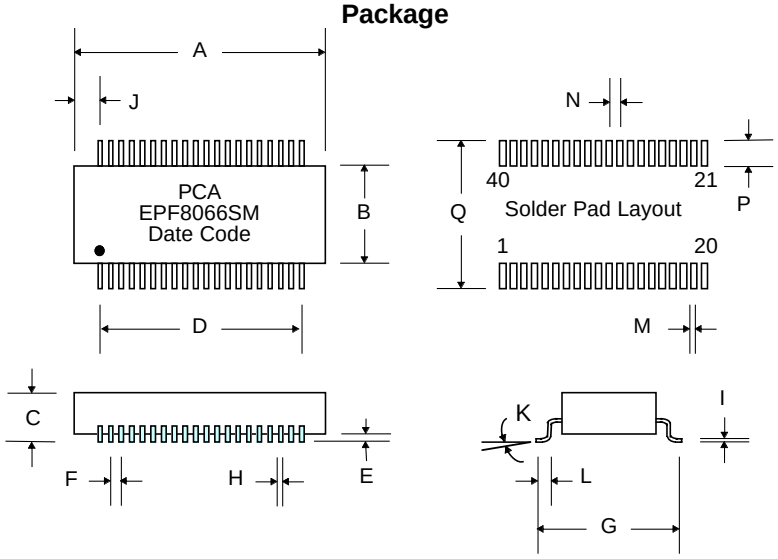

Dimensions

Dim.	(Inches) Min.	Max.	Nom.	(Millimeters) Min.	Max.	Nom.
A	1.110	1.130		28.19	28.70	
B	.470	.490		11.94	12.45	
C	.235	.255		6.10	6.35	
D	.950	Typ.		24.13	Typ.	
E	.010	.015		.254	.381	
F	.050	Typ.		1.27	Typ.	
G	.590	.610		14.99	15.49	
H	.016	.022		.406	.559	
I	.008	.012		.203	.305	
J	.085	Typ.		2.16	Typ.	
K	0°	8°		0°	8°	
L	.025	.045		.635	1.14	
M			.030			.762
N			.050			1.27
P			.090			2.29
Q			.670			17.02

PCA ELECTRONICS, INC.
16799 SCHOENBORN ST.
NORTH HILLS, CA 91343

CSF8066SMa Rev. Orig 1. 10/31/97

Product performance is limited to specified parameters. Data is subject to change without prior notice.

TEL: (818) 892-0761
FAX: (818) 894-5791
http://www.pca.com