EVERLIGHT ELECTRONICS CO.,LTD.

Device Number : CDDS-316-003 REV: 2

0.36" Single Digit Displays

PART NO. : ELS-316IDR ECN : Page: 1/5

Features :

- Industrial standard size.
- Low power consumption.
- Categorized for luminous intensity.

Applications:

- Audio equipment
- Instrument panels
- Digital read out display

Descriptions :

- The ELS-316 series is a large 9.14mm (0.36")high seven segment display designed for viewing distances up to 7 meters.
- These displays provide excellent reliability in bright ambient light.
- These devices are made with red segments and red surface.

PART NO.	Chip	
	Material	Emitted Color
ELS-316IDR	GaAsP/GaP	Hi-Eff Red

OFFICE : NO. 25,Lane 76,Sec.3, Chung Yang Rd., Tucheng 236, Taipei, Taiwan, R.O.C.
TEL : 886-2-2267-2000,2267-9936
FAX : 886-2-2267-6244,22676189,22676306
http://www.everlight.com

0.36" Single Digit Displays

PART NO. : ELS-316IDR ECN : Page: 2/5

■ Package Dimensions:

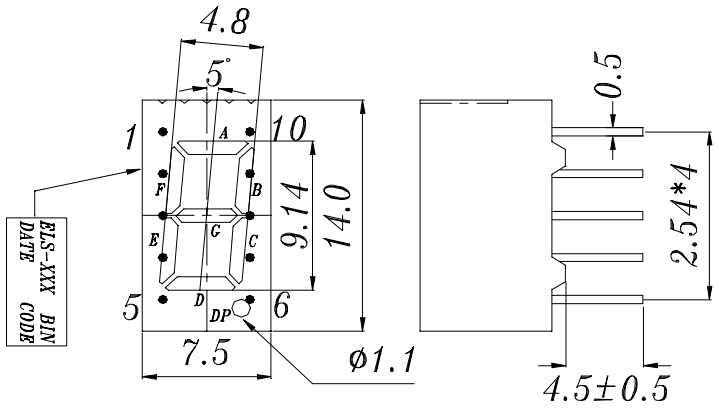

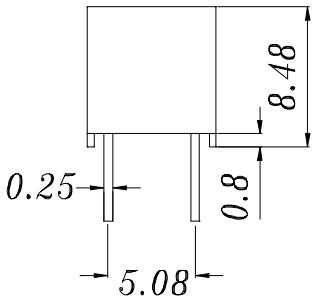

COMMON ANODE
1 COMMON ANODE
2 CATHODE F
3 CATHODE G
4 CATHODE E
5 CATHODE D
6 COMMON ANODE
7 CATHODE DP
8 CATHODE C
9 CATHODE B
10 CATHODE A

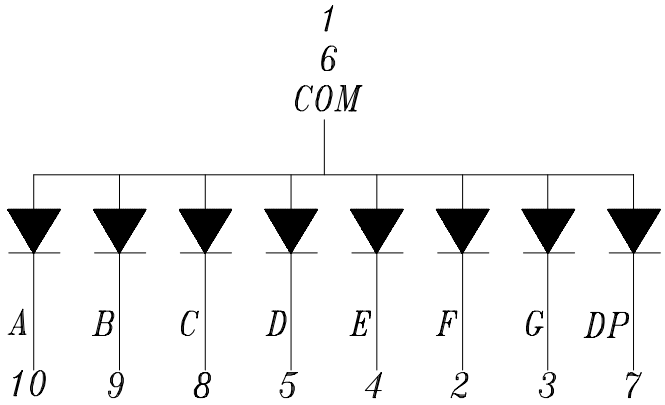

■ Notes:

1.All dimensions are in millimeters , tolerance is 0.25mm unless otherwise noted.
2.Above specification may be changed without notice.
Supplier will reserve authority on material change for above specification.

0.36" Single Digit Displays

PART NO. : ELS-316IDR ECN : Page: 3/5

■ Absolute maximum ratings at Ta = 25℃ :

Parameter	Symbol	Rating	Unit
Reverse Voltage	V_R	5	V
Forward Current	I_F	30	mA
Operating Temperature	Topr	-40 to +85	℃
Storage Temperature	Tstg	-40 to +100	℃
Soldering Temperature	Tsol	260 ± 5	℃
Power Dissipation	Pd	100	mW
Peak Forward Current(Duty 1/10 @ 1KHZ)	I_F(Peak)	160	mA

■ Electronic optical characteristics :

Parameter		Symbol	Min.	Typ.	Max.	Unit	Condition
Luminous Intensity	Per segment	Iv	0.45	1.3	----	mcd	I_F=10mA
	Per decimal point		0.3	0.90	----		
Peak Wavelength		λp	----	635	----	nm	I_F=20mA
Dominant Wavelength		λd	----	625	----	nm	I_F=20mA
Spectrum Radiation Bandwidth		△λ	----	45	----	nm	I_F=20mA
Forward Voltage		V_F	1.7	2.0	2.4	V	I_F=20mA
Reverse Current		I_R	----	----	10	μA	V_R=5V

Typical Electro-Optical Characteristic Curves:

CHIP Material:GaAsP/GaP
Emitted Color:Hi-Eff Red/Orange

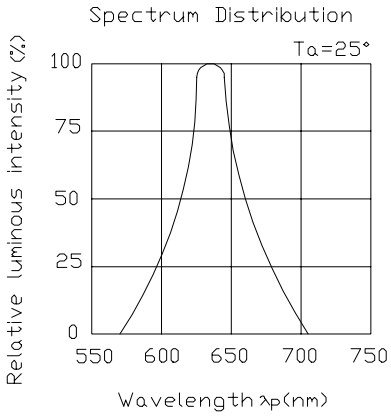

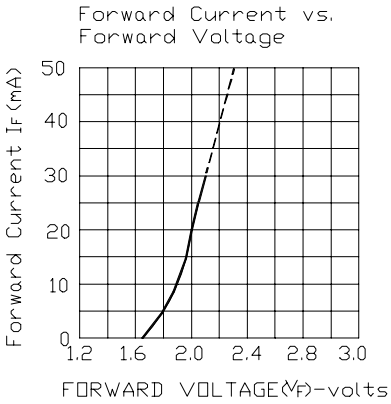

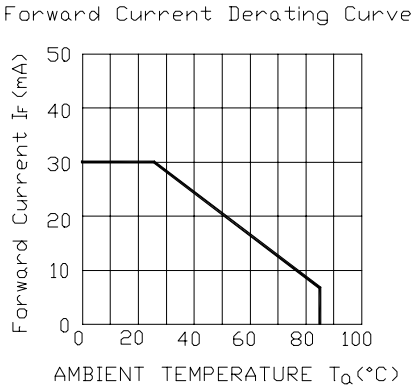

EVERLIGHT ELECTRONICS CO.,LTD.

Device Number : CDDS-316-003 REV: 2

0.36" Single Digit Displays

PART NO. : ELS-316IDR ECN : Page: 5/5

■ Reliability test items and conditions:

NO	Item	Test Conditions	Test Hours/Cycle	Sample Size	Ac/Re
1	Solder Heat	TEMP : 260℃ ± 5 ℃	5 SEC	76 PCS	0/1
2	Temperature Cycle	H : +85℃ 30min ∫ 5 min L : -55℃ 30min	50 CYCLE	76 PCS	0/1
3	Thermal Shock	H : +100℃ 5min ∫ 10 sec L : -10℃ 5min	50 CYCLE	76 PCS	0/1
4	High Temperature Storage	TEMP : 100℃	1000 HRS	76 PCS	0/1
5	Low Temperature Storage	TEMP : -55℃	1000 HRS	76 PCS	0/1
6	DC Operating Life	I_F = 10 mA	1000 HRS	76 PCS	0/1
7	High Temperature / High Humidity	85℃/85% RH	1000 HRS	76 PCS	0/1