1. 0 Features

∗ Display Mode: Reflective/Transflective/Transmissive and Positive Type STN

∗ Assembly: COB

∗ Backlight: Optional

2. 0 External Dimensions

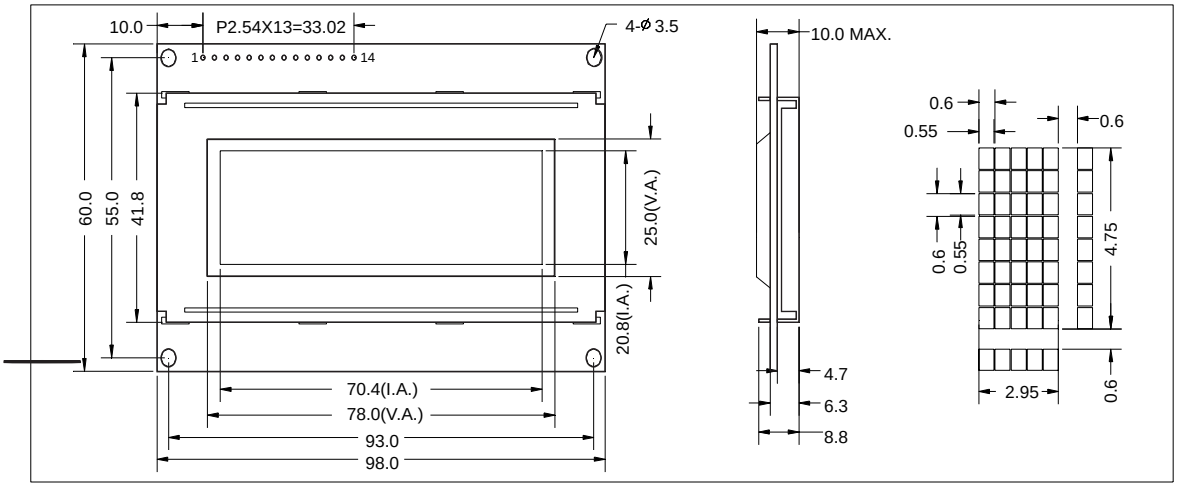

3. 0 Block Diagram

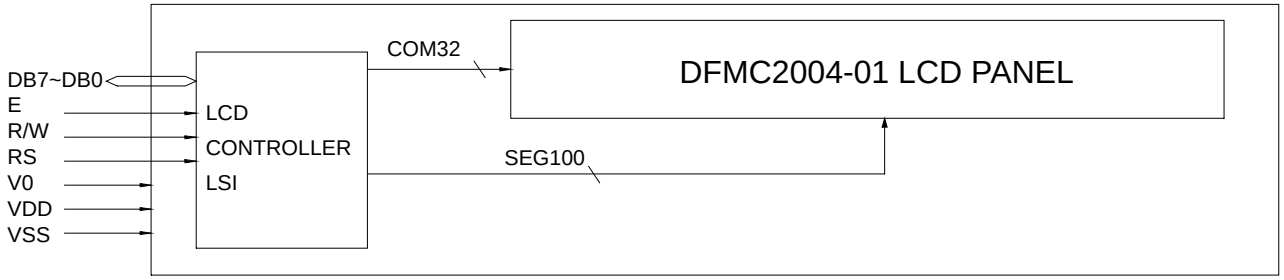

4. 0 Electro-Optical Characteristics

Item	Symbol	Conditions	Standard Value			Unit
			Min.	Typ.	Max.	
Power Supply for Logic	Vdd–Vss	—	4.5	5.0	5.5	V
Current Consumption for Logic & LC Driving	Id	Vdd=5.0V	—	2.0	3.0	mA
Operating Voltage for LCD	Vdd-V0	Ta=25℃	—	5.0	—	V
Response Time(Rising)	Tr	Top=25℃	—	200	250	ms
Response Time(Falling)	Tf	Ø=0°, θ=0°	—	250	300	ms
Viewing Angle	Ø2-Ø1	K≥2	-20	—	45	DEG.
Contrast Ratio	K	Ø=0°, θ=0°	3	—	—	—
Frame Frequency	f FLM	—	—	82.0	—	Hz

5. 0 I/O Connection

Pin No.	Symbol	Function	Pin No.	Symbol	Function
1	Vss	Signal ground (GND)	5	R/W	Read or write selecting
2	Vdd	Power Supply Voltage (+5V)	6	E	Enable signal
3	Vee	Power Supply for driving LCD	7~14	DB0~DB7	Data transport
4	RS	Register selecting			