SHINDENGEN

Super Fast Recovery Rectifiers

Dual

DE5LC20U

200V 5A

FEATURES

- SMT
- Low noise
- trr35ns

APPLICATION

- Switching power supply
- DC/DC converter
- Free Wheel
- Home Appliances, Office Equipment
- Telecommunication, Factory Automation

OUTLINE DIMENSIONS

Case : E-pack

Unit : mm

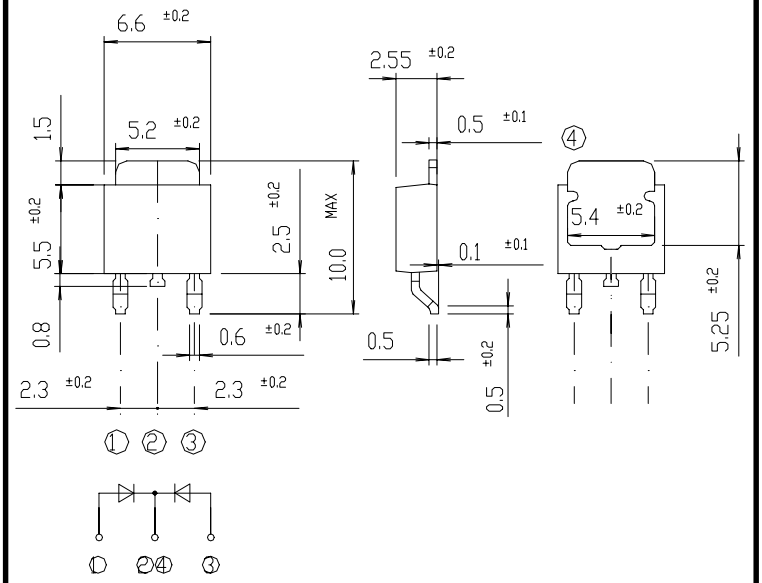

RATINGS

●Absolute Maximum Ratings (If not specified Tc=25℃)

Item	Symbol	Conditions	Ratings	Unit
Storage Temperature	Tstg		−55～150	℃
Operating Junction Temperature	Tj		150	℃
Maximum Reverse Voltage	V_{RM}		200	V
Average Rectified Forward Current	I_O	50Hz sine wave, R-load, Rating for each diode Io/2, Tc=81℃	5	A
		50Hz sine wave, R-load, Io/2, On almina substrate Ta=25℃	2.6	
Peak Surge Forward Current	I_{FSM}	50Hz sine wave, Non-repetitive 1 cycle peak value, Tj=25℃	50	A

●Electrical Characteristics (If not specified Tc=25℃)

Item	Symbol	Conditions	Ratings	Unit
Forward Voltage	V_F	I_F=2.5A, Pulse measurement, Rating of per diode	Max.0.98	V
Reverse Current	I_R	V_R=V_{RM}, Pulse measurement, Rating of per diode	Max.10	μA
Reverse Recovery Time	trr	I_F=0.5A, I_R=1A, Rating of per diode	Max.35	ns
Thermal Resistance	θjc	junction to case	Max.12	℃/W
	θja	junction to ambient	Max.55	

Copyright & Copy;2001 Shindengen Electric Mfg.Co.Ltd

DE5LC20U Forward Voltage

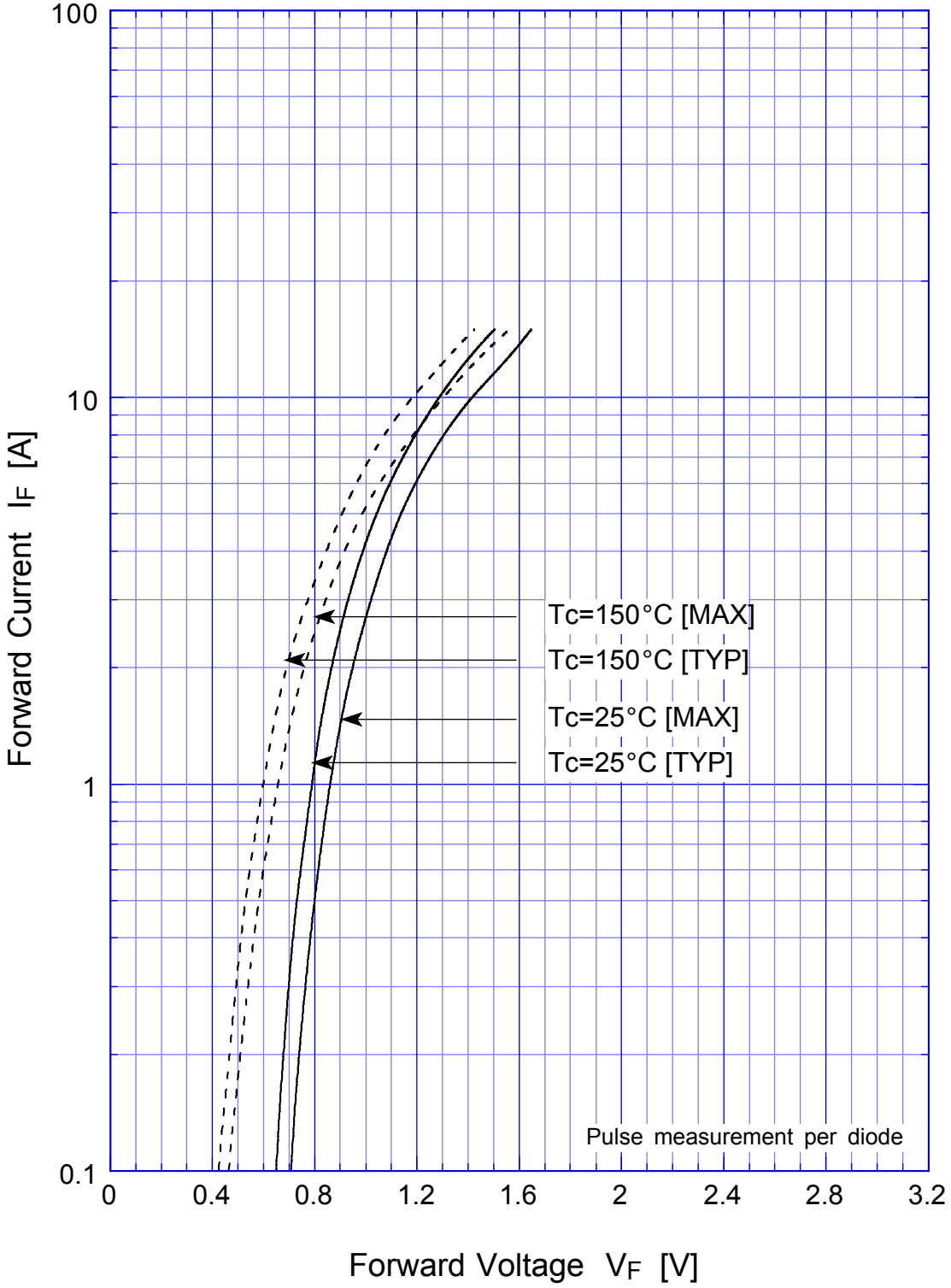

DE5LC20U Forward Power Dissipation

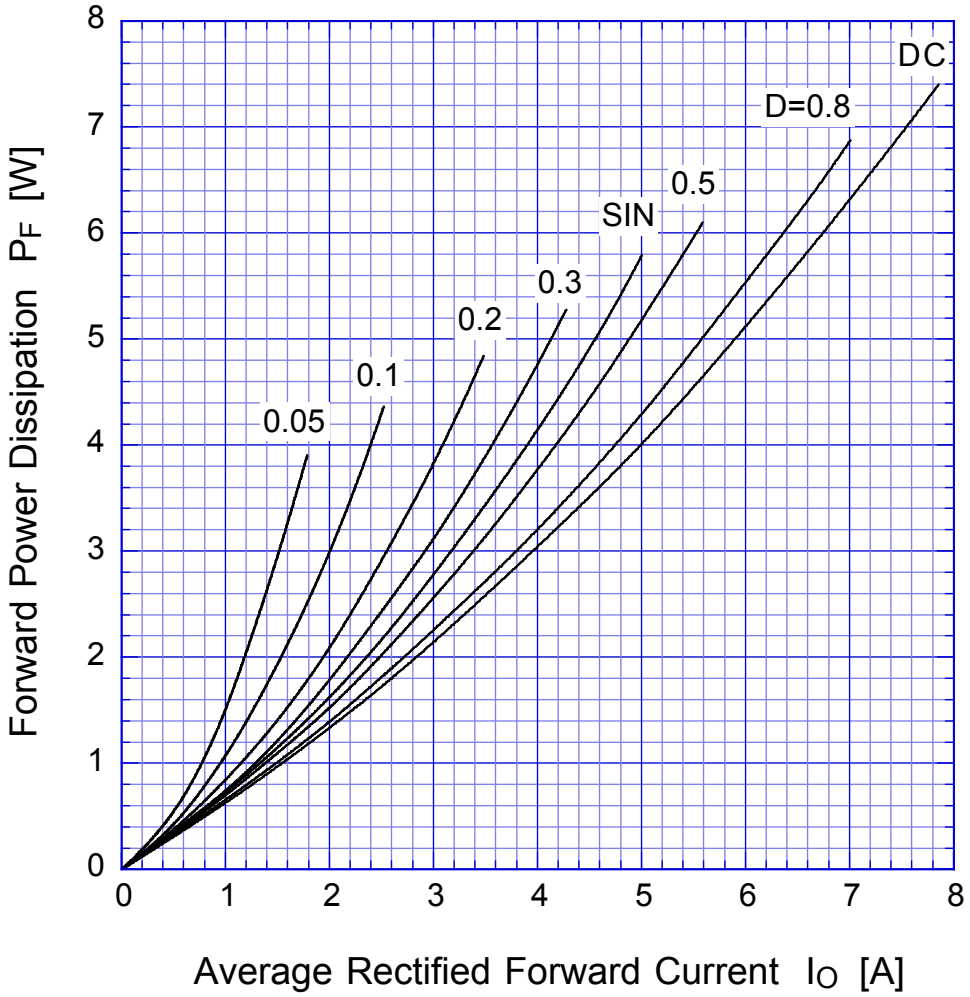

Tj = Tjmax

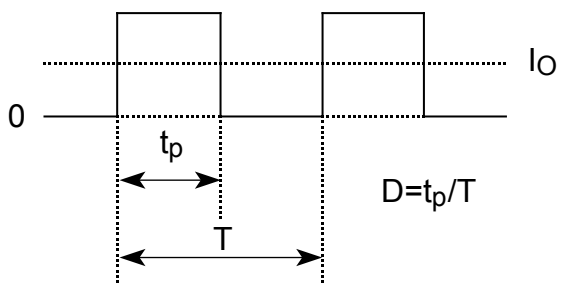

DE5LC20U Derating Curve

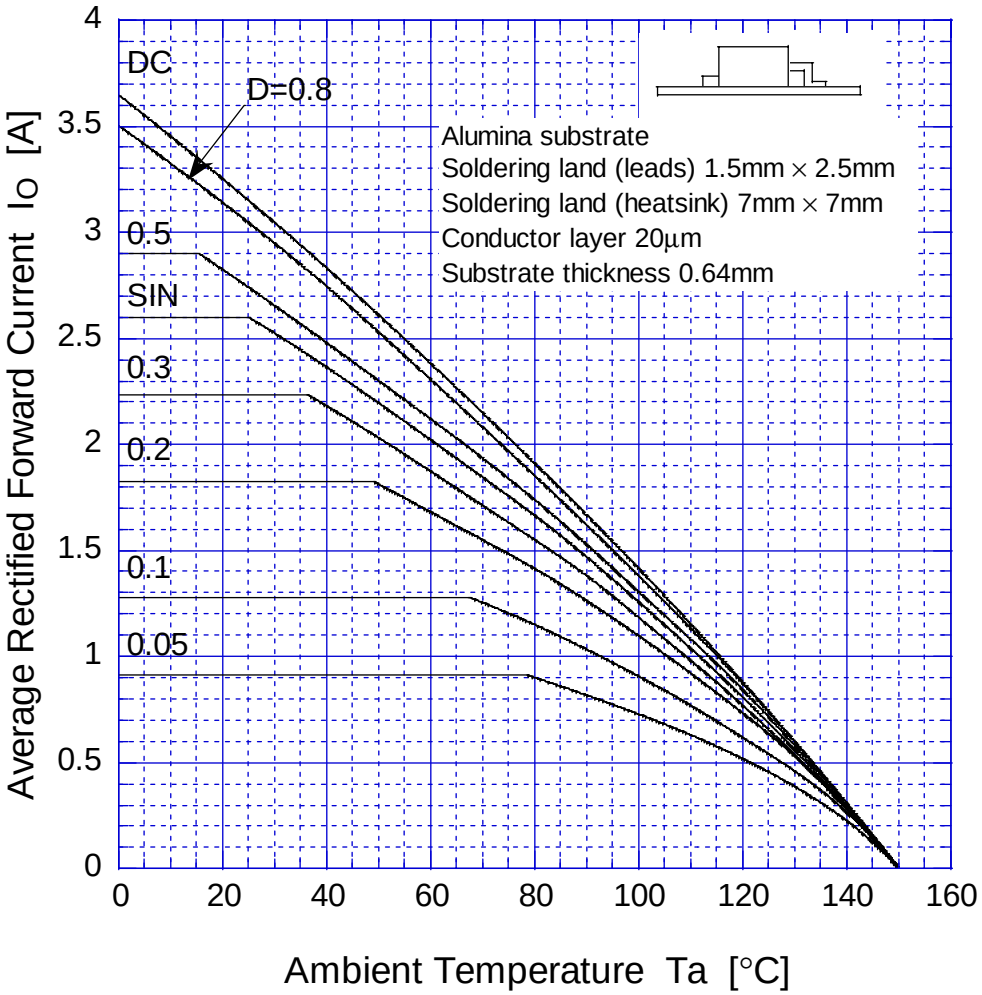

$V_R = V_{RM}$

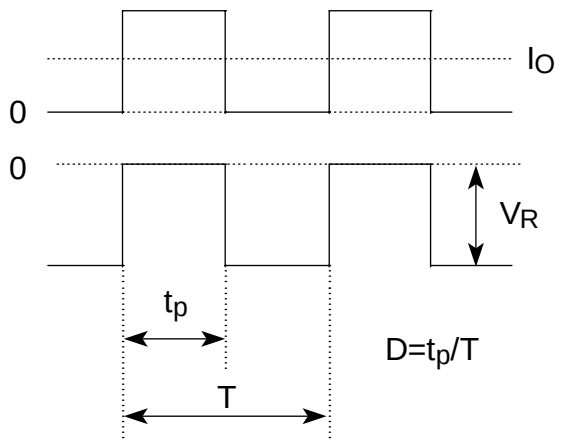

DE5LC20U Derating Curve

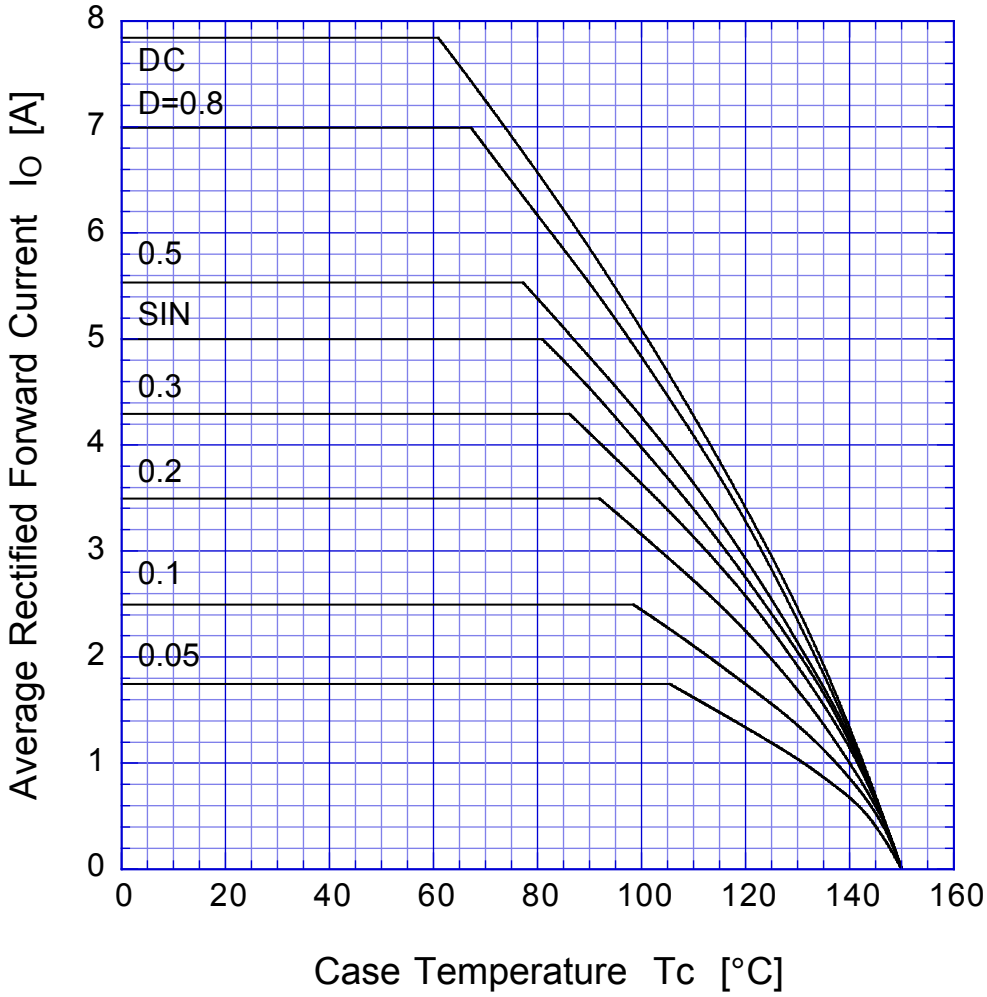

$V_R = V_{RM}$

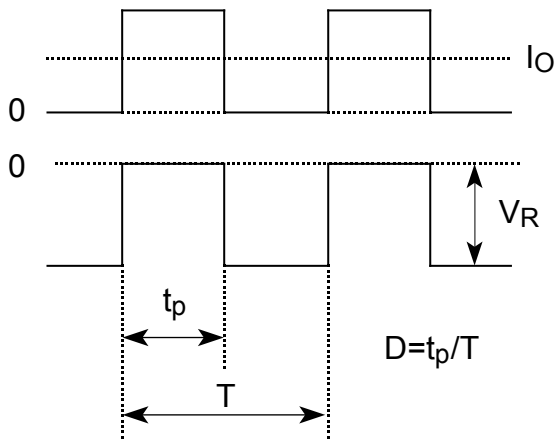

DE5LC20U Peak Surge Forward Capability

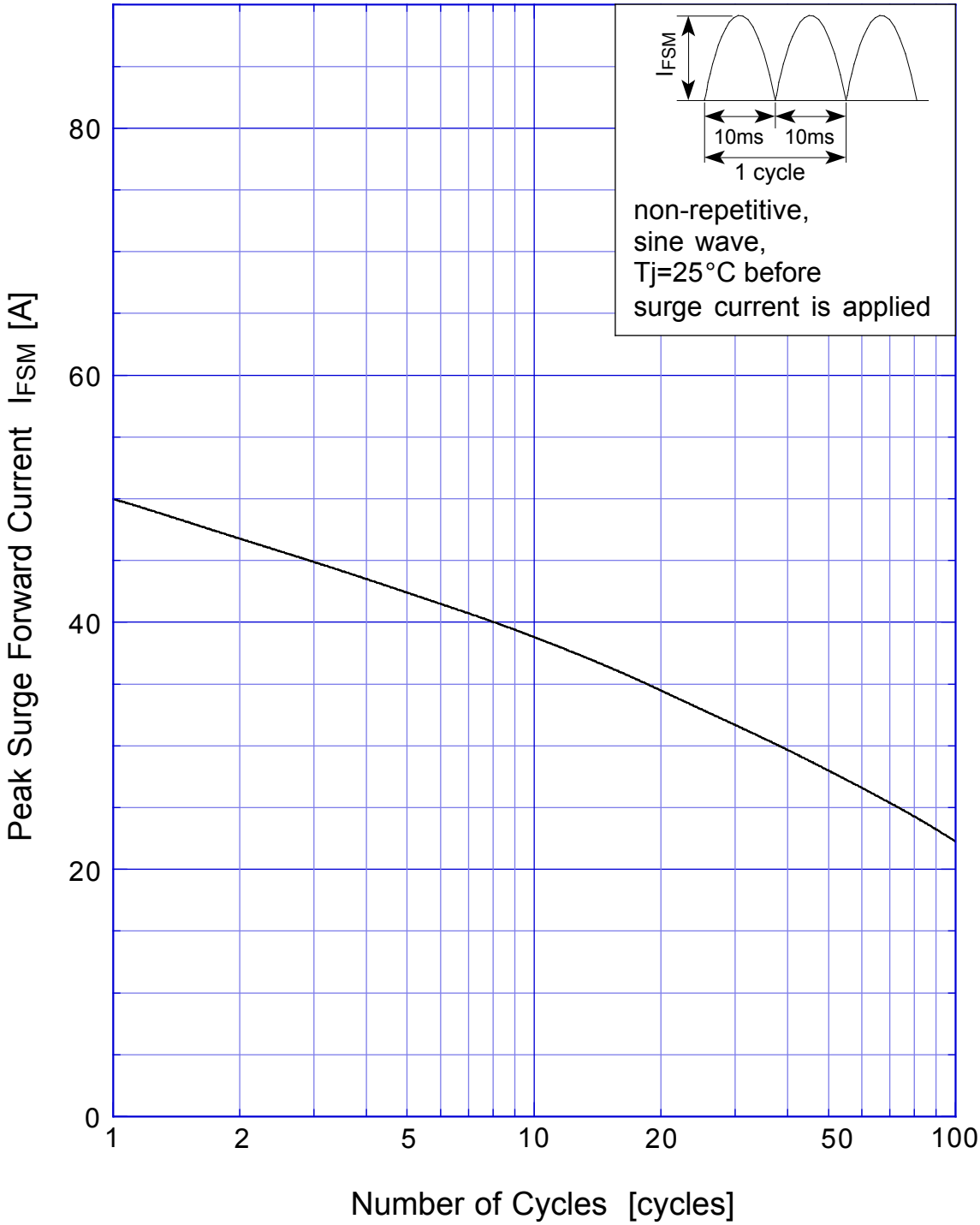
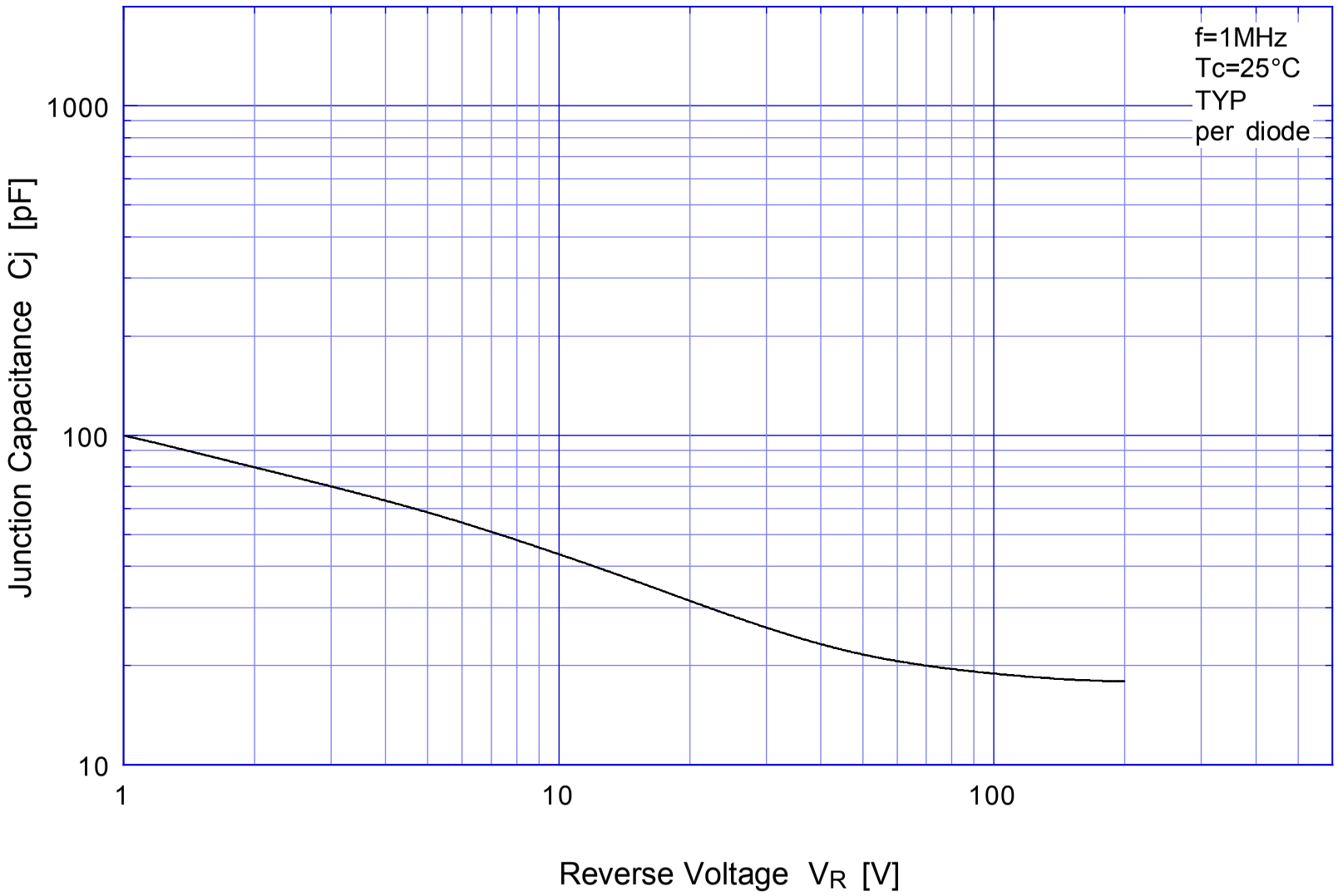
DE5LC20U Junction Capacitance