DG-24064 240 x 64dots 1/64 Duty STN/B&W Reflective/EL/LED/CCFL Backlight

■ MECHANICAL DATA

Item	Dimension	Unit
Module Size	180.0(W) x 65.0(H) x 12.0(T)	mm
View Area	132.0(W) x 39.0(H)	mm
Dot Size	0.49 x 0.49	mm
Dot Pitch	0.53 x 0.53	mm

■ ABSOLUTELY MAXIMUM RATINGS

Item	Symbol	Standard Value			Unit
		Min	Typ.	Max.	
Supply Voltage for Logic	V_{DD}-V_{SS}	0	--	7.0	V
Supply Voltage for LCD Drive	V_{DD}-V_{EE}	0	--	19.0	V
Input Voltage	V_I	V_{SS}	--	V_{DD}	V

■ ELECTRICAL CHARACTERISTICS

Item	Symbol	Condition	Specification	Unit
Logic circuit Power Supply Voltage	V_{DD}	--	4.75 → 5.25	V
	V_0	--	-5.0 →-20.0	V
EL Drive Voltage	V_{EL}	fEL=500Hz	90 → 110	V
High Level Input Voltage	V_{IH}	V_{DD}=5±0.25	(0.7 → 1.0) x V_{DD}	V
Low Level Input Voltage	V_{IL}	V_{DD}=5±0.25	(0→ 0.3) x V_{DD}	V
High Level Output Voltage	V_{OH}	V_{DD}=5±0.25	2.4 → V_{DD}	V
Low Level Output Voltage	V_{OL}	V_{DD}=5±0.25	0 → 0.4	V
Current Consumption	I_{DD}	V_{DD}=5V V_{EE}=-10V	15.0MAX	mA
	I_{EE}		2.0MAX	mA
	I_{EL}	V_{EL}=110V fEL=500Hz	20.0(AC) MAX	mA

■ PIN FUNCTIONS

Pin No.	Symbol	Level	Function
1	V_{SS}		Ground
2	V_{DD}		Power Supply for Logic Circuit
3	V_0		Power Supply for LCD
4	RS	H/L	H ⇨ Instruction, L⇨ Data
5	R/W	H/L	H: Data Read. L: Data Write
6	E	H/L	Enable
7~14	DB0~DB7		Data Bus Line
15	CS		Chip Enable Active "L"
16	RES		Reset Active "L"
17	V_{EE}		Negative Voltage Output (-10V)
18~20	NC		

■ BLOCK DIAGRAM

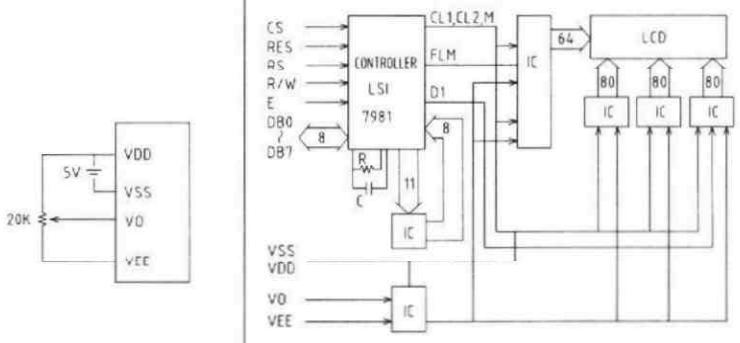
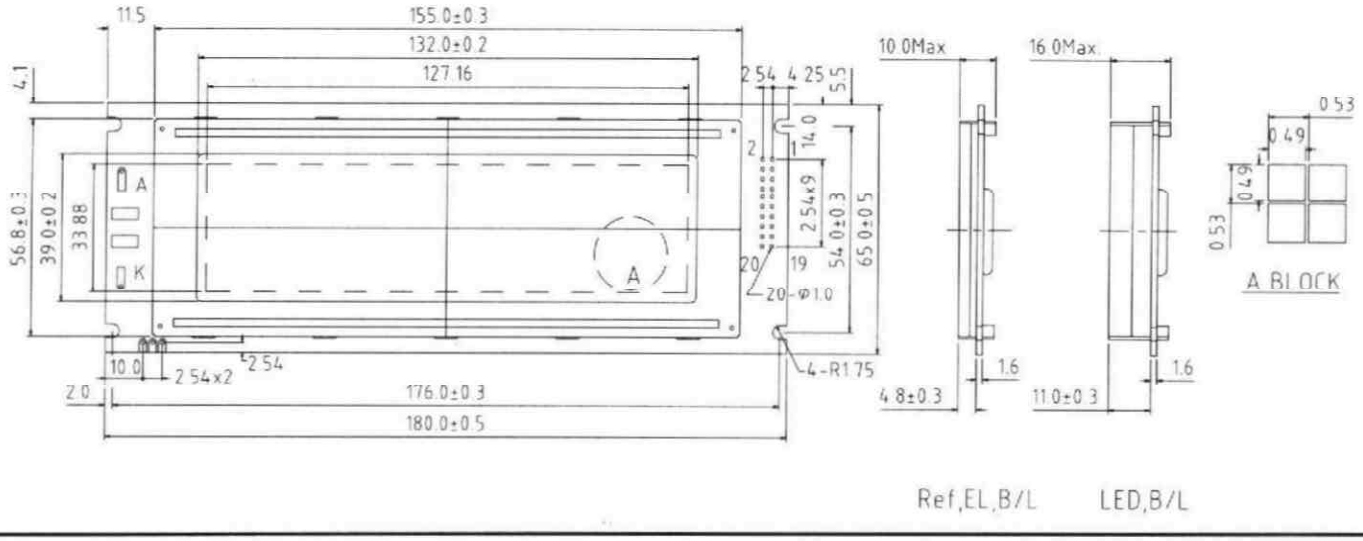
■ DIMENSION OUTLINE