TetraFET

D1094UK

METAL GATE RF SILICON FET

MECHANICAL DATA

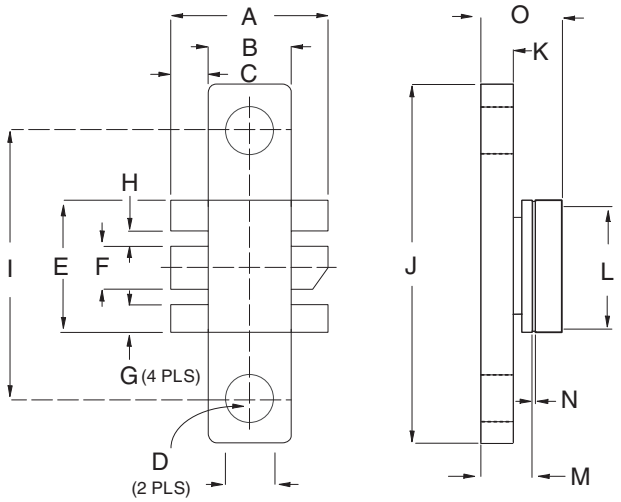

SOT 171

PIN 1	SOURCE	PIN 2	SOURCE
PIN 3	GATE	PIN 4	DRAIN
PIN 5	SOURCE	PIN 6	SOURCE

DIM	mm	Tol.	Inches	Tol.
A	10.92	0.25	0.430	0.001
B	5.84	0.08	0.230	0.003
C	2.54	0.08	0.100	0.003
D	3.30 dia	0.13	0.130 dia	0.05
E	9.14	0.08	0.360	0.003
F	3.05	0.08	0.120	0.003
G	2.01	0.08	0.079	0.003
H	1.04	0.08	0.041	0.003
I	18.42	0.08	0.725	0.003
J	24.77	0.08	0.975	0.003
K	2.74	0.08	0.108	0.003
L	9.14	0.13	0.360	0.005
M	4.19	0.08	0.165	0.003
N	0.13	0.05	0.005	0.002
O	7.11	MAX	0.280	MAX

GOLD METALLISED MULTI-PURPOSE SILICON DMOS RF FET 20W – 28V – 400MHz SINGLE ENDED

FEATURES

- **SIMPLIFIED AMPLIFIER DESIGN**
- **SUITABLE FOR BROAD BAND APPLICATIONS**
- **VERY LOW C_{rss}**
- **SIMPLE BIAS CIRCUITS**
- **LOW NOISE**
- **HIGH GAIN – 11 dB MINIMUM**

APPLICATIONS

- **HF/VHF/UHF COMMUNICATIONS from 1 MHz to 1 GHz**

ABSOLUTE MAXIMUM RATINGS (T_{case} = 25°C unless otherwise stated)

P_D	Power Dissipation	50W
BV_{DSS}	Drain – Source Breakdown Voltage	65V
BV_{GSS}	Gate – Source Breakdown Voltage	±20V
$I_{D(sat)}$	Drain Current *	6A
T_{stg}	Storage Temperature	–65 to 150°C
T_j	Maximum Operating Junction Temperature	200°C

Semelab Plc reserves the right to change test conditions, parameter limits and package dimensions without notice. Information furnished by Semelab is believed to be both accurate and reliable at the time of going to press. However Semelab assumes no responsibility for any errors or omissions discovered in its use. Semelab encourages customers to verify that datasheets are current before placing orders.

Semelab plc. Telephone +44(0)1455) 556565. Fax +44(0)1455) 552612.
E-mail: sales@semelab.co.uk Website http://www.semelab.co.uk

Document Number 2618
Issue 4

ELECTRICAL CHARACTERISTICS (T_{case} = 25°C unless otherwise stated)

Parameter		Test Conditions			Min.	Typ.	Max.	Unit
BV_{DSS}	Drain–Source Breakdown Voltage	V_{GS} = 0	I_D = 10mA		65			V
I_{DSS}	Zero Gate Voltage Drain Current	V_{DS} = 28V	V_{GS} = 0				6	mA
I_{GSS}	Gate Leakage Current	V_{GS} = 20V	V_{DS} = 0				6	µA
$V_{GS(th)}$	Gate Threshold Voltage *	I_D = 10mA	V_{DS} = V_{GS}		1		7	V
g_{fs}	Forward Transconductance *	V_{DS} = 10V	I_D = 1.2A		1.08			S
G_{PS}	Common Source Power Gain	P_O = 20W			11			dB
η	Drain Efficiency	V_{DS} = 28V	I_{DQ} = 0.6A		40			%
VSWR	Load Mismatch Tolerance	f = 400MHz			20:1			—
C_{iss}	Input Capacitance	V_{DS} = 0	V_{GS} = –5V	f = 1MHz			72	pF
C_{oss}	Output Capacitance	V_{DS} = 28V	V_{GS} = 0	f = 1MHz			36	pF
C_{rss}	Reverse Transfer Capacitance	V_{DS} = 28V	V_{GS} = 0	f = 1MHz			3	pF

* Pulse Test: Pulse Duration = 300 µs , Duty Cycle ≤ 2%

HAZARDOUS MATERIAL WARNING

The ceramic portion of the device between leads and metal flange is beryllium oxide. Beryllium oxide dust is highly toxic and care must be taken during handling and mounting to avoid damage to this area.

THESE DEVICES MUST NEVER BE THROWN AWAY WITH GENERAL INDUSTRIAL OR DOMESTIC WASTE.

THERMAL DATA

$R_{THj–case}$	Thermal Resistance Junction – Case	Max.3.5°C / W

Semelab Plc reserves the right to change test conditions, parameter limits and package dimensions without notice. Information furnished by Semelab is believed to be both accurate and reliable at the time of going to press. However Semelab assumes no responsibility for any errors or omissions discovered in its use. Semelab encourages customers to verify that datasheets are current before placing orders.

Semelab plc. Telephone +44(0)1455) 556565. Fax +44(0)1455) 552612.
E-mail: sales@semelab.co.uk Website http://www.semelab.co.uk

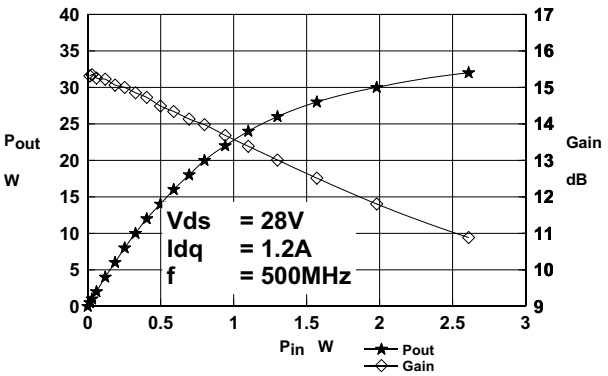

Figure 1 Output Power and Gain vs. Input Power

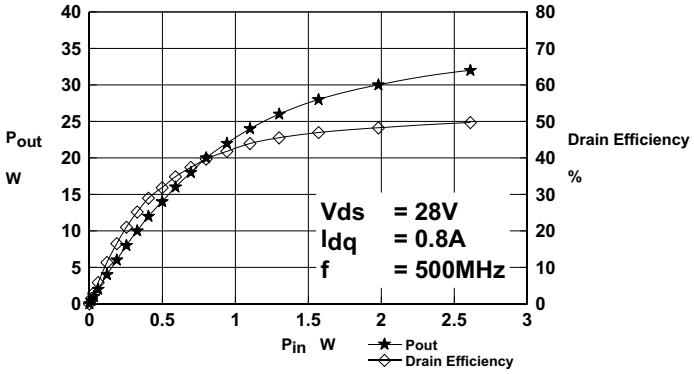

Figure 2. Output Power and Efficiency vs. Input Power

D1094UK
20W/1.2A/28V
OPTIMUM SOURCE AND LOAD IMPEDANCE

Frequency MHz	ZS Ω	ZL Ω
500MHZ	1.7+j7.4	13.4+j4.0

Typical S Parameters

! Vds=28V Idq=0.6A
MHZ S MA R 50

!Freq	S11		S21		S12		S22	
!MHz	mag	ang	mag	ang	mag	ang	mag	ang
100	0.85	-155.5	15.46	87.8	0.017	-0.7	0.51	-144.5
150	0.86	-162.3	10.2	73.4	0.016	-8.4	0.55	-148.3
200	0.86	-167.1	7.325	64.7	0.014	-12	0.6	-150.4
250	0.88	-169	5.631	56	0.013	-16.1	0.65	-152.5
300	0.89	-171.2	4.597	50.7	0.012	-15	0.69	-155
350	0.9	-172.4	3.476	40.6	0.01	-15.9	0.73	-157
400	0.91	-173.9	2.971	38.2	0.009	-13	0.77	-159
450	0.92	-175.3	2.434	32.2	0.007	-5.4	0.8	-161.2
500	0.93	-177.1	2.155	29.7	0.006	5.7	0.82	-162.8
550	0.94	-177.7	1.833	24.1	0.006	18.7	0.84	-164.6
600	0.94	-179.6	1.634	17.6	0.006	29.4	0.86	-166.8
650	0.95	179.2	1.316	14.4	0.006	47.5	0.89	-168.4
700	0.95	178.6	1.182	9.4	0.007	52.3	0.9	-169.2
750	0.95	177.4	0.9629	6.4	0.008	61.3	0.91	-170.7
800	0.96	176.6	0.7884	5.3	0.009	65.1	0.92	-172.7
850	0.97	175.4	0.7166	8.8	0.011	70.3	0.93	-174
900	0.97	174.7	0.6543	7.2	0.012	71.7	0.93	-175
950	0.96	173.7	0.6067	7.7	0.014	74.2	0.94	-175.4
1000	0.97	173.2	0.556	5.7	0.015	75	0.94	-176.6

Semelab Plc reserves the right to change test conditions, parameter limits and package dimensions without notice. Information furnished by Semelab is believed to be both accurate and reliable at the time of going to press. However Semelab assumes no responsibility for any errors or omissions discovered in its use. Semelab encourages customers to verify that datasheets are current before placing orders.

Semelab plc. Telephone +44(0)1455) 556565. Fax +44(0)1455) 552612.
E-mail: sales@semelab.co.uk Website http://www.semelab.co.uk

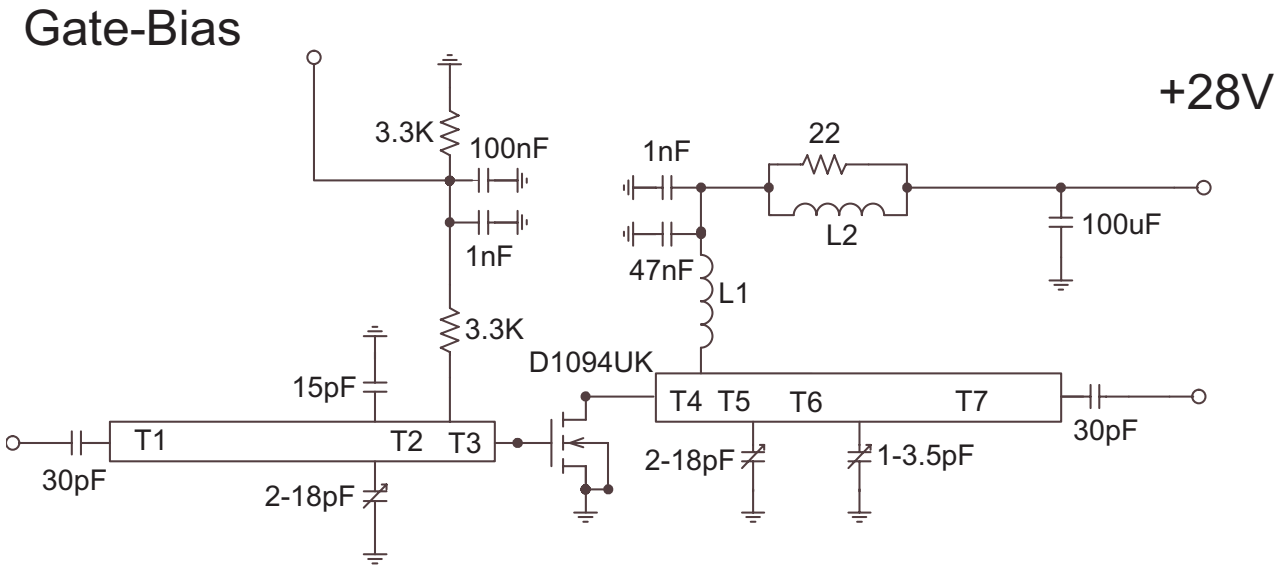

500MHz TEST FIXTURE

Substrate 1.6mm thick G200

All microstrip lines W=2.8mm

T1 46.3mm

T2 2.2mm

T3 T4 8mm

T5 4.3mm

T6 11.7mm

T7 32.3mm

L1 7 turns 24 swg enamelled copper wire, 3mm i.d.

L2 1.5 turns 24 swg enamelled copper wire on ferrite core

Semelab Plc reserves the right to change test conditions, parameter limits and package dimensions without notice. Information furnished by Semelab is believed to be both accurate and reliable at the time of going to press. However Semelab assumes no responsibility for any errors or omissions discovered in its use. Semelab encourages customers to verify that datasheets are current before placing orders.

Semelab plc. Telephone +44(0)1455) 556565. Fax +44(0)1455) 552612.
E-mail: sales@semelab.co.uk Website http://www.semelab.co.uk