ILC7280

Micropower Dual 150mA CMOS RF LDO™ Regulators with 75dB Ripple Rejection

Preliminary Information

Features

- Guaranteed 150mA output per regulator
- Ultra low 150mV dropout at 150mA
- 1% output voltage accuracy
- Requires only 0.47µF output capacitor
- Only 150µA ground current at 150mA load
- 60dB ripple rejection at 1kHz (C_{OUT} = 0.47µF)
- 80µV_{RMS} noise at BW = 300Hz to 50kHz
- Excellent line and load transient response
- Over current / over temperature protection
- 8-pin MSOP package
- -60dB cross talk

Applications

- Cellular Phones, pagers and wireless headsets
- Palmtops, organizers, PDAs and portable electronics
- Battery powered portable appliances and equipment
- Remote data accumulation and instrumentation

Description

The ILC7280 is two independent 150mA low dropout (LDO) voltage regulators in an 8-pin MSOP package. Each regulator output is independently short circuit protected and has independent enable lines. The device offers a unique combination of low dropout voltage and low quiescent current of CMOS as well as the low noise and high ripple rejection characteristics of bipolar LDO regulators. Moreover, only one input capacitor is required.

Dropout Voltage: Typically 150mV at 150mA load, and 1mV at 1mA load.

Ground Pin Current: Typically 130µA at 1mA load, and 135µA at 150mA load.

Ripple Rejection: 55dB at 1kHz and 60dB at 100kHz.

Shutdown Mode: Less than 0.5µA quiescent current in shutdown mode.

Small Package: MSOP-8

Small Capacitor: Requires only a 0.47µF external capacitor on the regulator output.

Precision Output: Output voltage trimmed to 1% accuracy.

Output Noise: 80µV_{RMS}, optional noise bypass capacitor at pin 3 will further reduce noise on $V_{OUTA/B}$

Voltage Pairings Available: 3.0/3.0V, 3.0/2.8V, 3.0/2.5V, 2.8/2.8V

Typical Applications

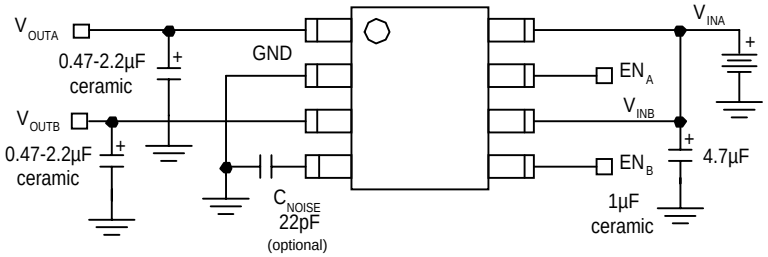

Figure 1: Note: Enable may be connected to V_{IN}, C_{NOISE} is common to both LDOs

Rev. 1.9

PRELIMINARY INFORMATION describes products that are in the design stage. Specifications may change in any manner whatever without notice. Contact Fairchild Semiconductor for current information.

©2001 Fairchild Semiconductor Corporation

Preliminary Information

Pin Assignments

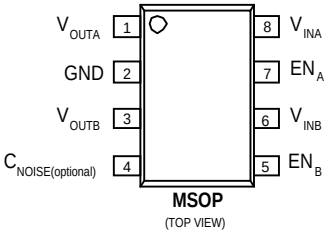

ILC7280CS-XXXX

Pin Definitions ILC7280

Pin Number	Pin Name	Pin Function Description
1	V_{OUTA}	Regulator Output A
2	GND	Ground
3	V_{OUTB}	Regulator Output B
4	C_{NOISE} (optional)	Voltage Reference Bypass: Connect external 22pF capacitor to GND to minimize output noise in regulator “A” or “B.” May be left open. Do not ground.
5	E_{NB}	Enable/Shutdown B (input): CMOS compatible input. Logic high = enable, logic low or open = shutdown. Do not leave floating.
6	V_{INB}	Supply Input B (Internally connected to pin 8)*
7	E_{NA}	Enable/Shutdown A (Input): CMOS compatible input. Logic high = enable, logic low or open = shutdown. Do not leave floating.
8	V_{INA}	Supply Input A (Internally connected to pin 6)* Galvanic connection only.

*If maximum current required from each regulator then connect both pin 6 and pin 8 to V_{DD}

Absolute Maximum Ratings

Parameter	Symbol	Ratings	Unit
Input Voltage S/D Input Voltage	V_{IN} $V_{S/D}$	-0.3 to +12 -0.3 to V_{IN}	V
Output Current	I_{OUT}	Short circuit protected	mA
Output Voltage	V_{OUT}	-0.3 to 10	V
Power Dissipation	P_D	Internally Limited	mW
Maximum Junction Temperature	$T_{J(max)}$	175	°C
Storage Temperature	T_{stg}	-40~+125	°C
ESD Rating		2	kV
Operating Input Voltage	V_{IN}	2.1 to 8	V
Operating Ambient Temperature	T_A	-40 to +85	°C
Package Thermal Resistance	θ_{JA}	200	°C/W

©2001 Fairchild Semiconductor Corporation

Preliminary Information

Electrical Characteristics ILC7280CS

Unless otherwise specified, all limits are at $_A$ = 25°C; $V_{IN} = V_{OUT(NOM)} + 1V$, I_{OUT} = 1mA, C_{OUT} = 0.47µF, $V_{S/D}$ = 2V. The • denotes specifications which apply over the specified operating temperature range. (Note 2)

Parameter	Symbol	Conditions		Min.	Typ.	Max.	Units
Output Voltage	V_{OUT}	I_{OUT} = 1mA		-1	V_{OUT} (Nom.)	+1	%V (Nom.)
Output Voltage	V_{OUT}	1mA < I_{OUT} < 100mA 1mA < I_{OUT} < 100mA		-2	V_{OUT} (Nom.)	+2	%V (Nom.)
Output Voltage	V_{OUT}	1mA < I_{OUT} < 150mA 1mA < I_{OUT} < 150mA		-3	V_{OUT} (Nom.)	+3	%V (Nom.)
Line Regulation	$\Delta V_{OUT}/\Delta V_{IN}$	$V_{OUT(NOM)} + 1V \leq V_{IN} \leq 10V$	•		0.007	0.014 0.032	%/V
Dropout Voltage (Note 3)	$V_{IN} - V_{OUT}$	I_{OUT} = 0mA	•		0.1	1 2	mV
Dropout Voltage (Note 3)	$V_{IN} - V_{OUT}$	I_{OUT} = 10mA	•		10	15 20	mV
Dropout Voltage (Note 3)	$V_{IN} - V_{OUT}$	I_{OUT} =150mA	•		150	175 200	mV
Ground Pin Current One regulator on	I_{GND}	I_{OUT} = 0mA			90		µA
Ground Pin Current One regulator on	I_{GND}	I_{OUT} = 10mA			100		µA
Ground Pin Current One regulator on	I_{GND}	I_{OUT} = 150mA			135		µA
Ground pin Current Both regulator on	I_{GND}	I_{OUT} = 0mA			105		µA
Ground pin Current Both regulator on	I_{GND}	I_{OUT} = 10mA			115		µA
Ground pin Current Both regulator on	I_{GND}	I_{OUT} = 150mA			150		µA
Shutdown Current	$I_{S/D}$		•		0.1	1	µA
Shut Down Input Voltage	$V_{S/D}$	High = Regulator On Low = Regulator Off	• •	2.0		10 0.6	V
Peak Output Current (Note 4)	$I_{OUT(peak)}$	$V_{OUT} > 0.95V_{OUT(NOM)}$		300	500		mA
Output Noise Voltage (RMS)	e_N	BW = 300Hz to 50kHz, C_{NOISE} = 0pF					µV
Ripple Rejection	$\Delta V_{OUT}/\Delta V_{IN}$	freq = 1kHz freq = 10kHz			60 60		dB
Dynamic Line Regulation	$\Delta V_{OUT(line)}$	freq = 100kHz V_{IN}: $V_{OUT(NOM)}$ + 1V to $V_{OUT(NOM)}$ + 2V; dV_{IN}/dt = 1V/µS;Io = 150mA			60 10		mV
Dynamic Load Regulation	$\Delta V_{OUT(load)}$	I_{OUT}: 0 to 150mA; $d(I_{OUT})/dt$ = 50A/µs, with C_{OUT} = 2.2µF			40 20		mV
Short Circuit Current	I_{SC}	V_{OUT} = 0V			300		mA

©2001 Fairchild Semiconductor Corporation

Notes:

1. Absolute maximum ratings indicate limits which when exceeded may result in damage to the component. Electrical specifications do not apply when operating the device outside of its rated operating conditions.
2. Specified Min/Max limits are production tested or guaranteed through correlation based on statistical control methods. Measurements are taken at constant junction temperature as close to ambient as possible using low duty pulse testing.
3. Dropout Voltage is defined as the measured Differential Voltage between input and output voltage, when the output voltage drops 2% below the nominal output voltage as V_{IN} is decreased, and approaches V_{OUT}. Nominal output voltage is defined at $V_{IN} = V_{OUT} + 1V$.
4. Guaranteed by design

Preliminary Information

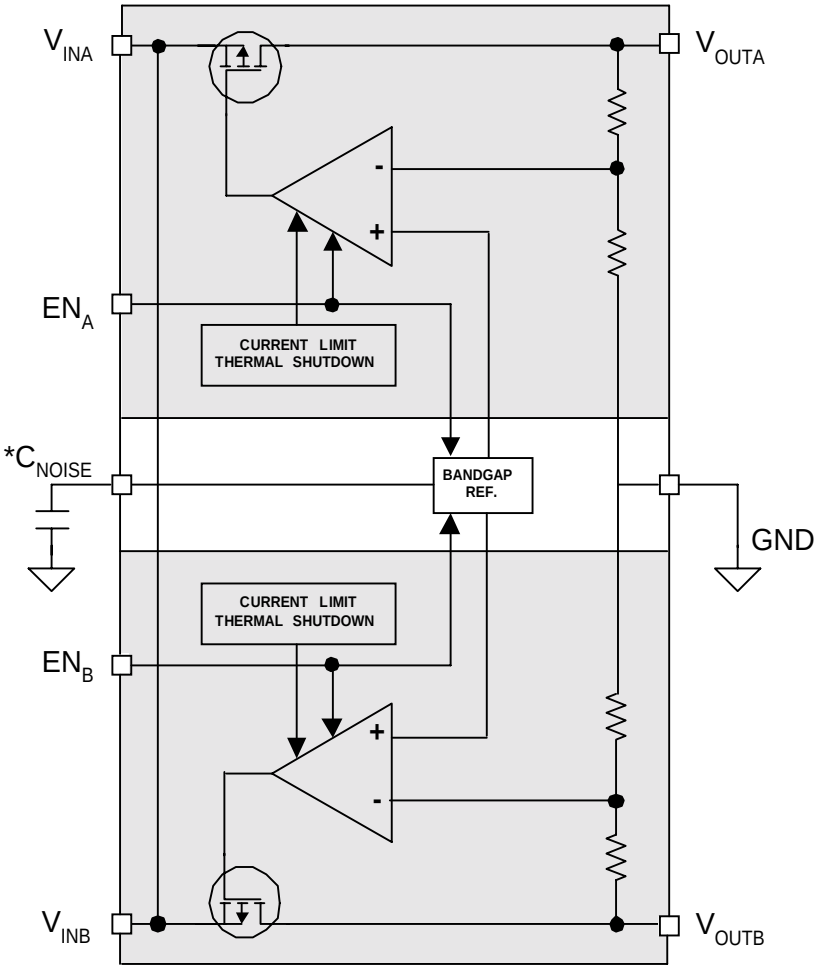

***Optional**

©2001 Fairchild Semiconductor Corporation

Preliminary Information

APPLICATIONS INFORMATION

$+V_{IN}$ A and B

These pins are connected internally through a galvanic connection for maximum power from each regulator, both V_{INA} and V_{INB} must be connected externally to V_{DD}.

Enable/Shutdown

Forcing EN_A and/or EN_B to a voltage greater than 2V, enables the regulator(s). These inputs are CMOS logic compatible gates. If this feature is not required, connect EN_A and/or EN_B to V_{IN}. Note that V_{INA} and V_{INB} are connected internally. To minimize the effect of imbalanced current sharing and possible noise, both V_{INA} and V_{INB} should also be connected externally.

Input Capacitor

A 1µF capacitor should be placed from $V_{INA/B}$ to GND if there is more than 10 inches of wire between the input and the ac filter capacitor or if a battery is used as the input.

Reference Bypass Capacitor

C_{NOISE} (the reference voltage bypass capacitor) is connected to the internal V_{REF} which is common to regulator's A and B. A 22pF capacitor connected between C_{NOISE} and GND decouples the reference output voltage and provides a significant reduction in regulator output noise. An effect of C_{NOISE} also reduces the regulator phase margin. When using C_{NOISE}, output capacitors of 2.2µF or greater are required to maintain stability.

Also affected by C_{NOISE} is the start up speed of the ICL7280. The speed is inversely proportional to the value of C_{NOISE}. If a slow or delayed start up time is desired, a larger value of C_{NOISE} is used. Conversely, faster start up times or instant-on applications will require smaller values of C_{NOISE} or its omission with the pin left open. The trade-off of noise to response should be considered.

Output Capacitor

An output capacitor is required from V_{OUTA} and V_{OUTB} to GND to prevent oscillation and minimize the effect of load transient currents. The minimum size of the output capacitor(s) is dependent on the usage of C_{NOISE} and its value. Without C_{NOISE}, a minimum of 1µF is recommended. For C_{NOISE} = 22pF, a minimum of 2.2µF is recommended (See figure 1). Larger values of output capacitance will slow the regulator's response during power up. The upper limit of capacitance is indefinite, however, it should have an equivalent series resistance (ESR) of approximately 5Ω or less and a series resonance above 1MHz. Stability is assured with the use of a capacitor having ultra-low ESR and as such will not produce low amplitude oscillations nor an underdamped transient response. This allows the use of modern ceramic capacitors in preference to their more costly Tantalum counterparts.

If the system design calls for smaller load currents, lower capacitance may be used. Below 10mA the capacitance may be reduced to 0.47µF and below 1mA to 0.33µF

No-Load Stability

The ILC7280 will remain stable and in regulation with no load current. These are desirable performance features for applications such as keep-alive modes in CMOS systems.

Split-Supply Operation

When using the ILC7280 in a system requiring that the load be returned to the negative voltage source, the output(s) must be diode clamped to inhibit significant voltage excursions below ground. A simple external diode clamp to ground will afford protection from damage to the device. (See figure below).

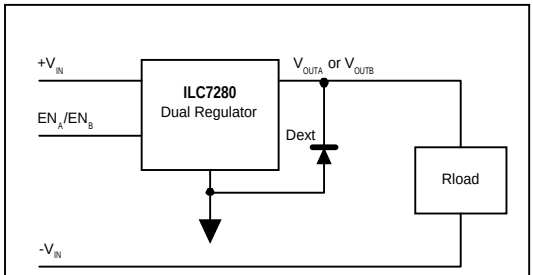

External Diode, Dext inhibits significant voltage excursions below ground in a split power supply load return.

©2001 Fairchild Semiconductor Corporation

Preliminary Information

APPLICATIONS INFORMATION (continued)

Thermal Considerations

For optimum Thermal dissipation and device reliability, devices mounted on conventional FR4 PCB material should be surrounded and connected to as much ground copper as possible. In a worse case application with minimum trace widths and no ground plane, the MSOP-8 package exhibits a thermal resistance of 200 °C/W. The risk to the device can be calculated in the following examples. (An Excel spreadsheet calculator is also available at the Impala Linear web site: Products/ILC7280.)

Thermal Evaluation Examples

For an ambient temperature of 50°C, the maximum package power dissipation is:

P D(max) = (125°C - 50°C) / 200°C/W

P D(max) = 375mW

If the intent is to operate from a 4V power source with a 150mA load current from both outputs at a 50°C ambient temperature, the expected power dissipation is found in the following calculation:

P D(each regulator) = $(V_{IN} - V_{OUT}) * I_{OUT} + (V_{IN} * I_{GND})$

P D(each regulator) = (4V - 3V) * 150mA + (4V * 0.12mA)

P D(each regulator) = 150mW

P D(both regulators) = 2 * 150mW

P D(both regulators) = 300mW

In this example the total power dissipated is 300mW which is below the 375mW maximum package consideration and therefore safe to operate. It should be noted that it is not always possible to operate both regulators at the maximum output current. For example in a 5V input and 3V output application at 50°C, one regulator operating at 150ma would dissipate 267.5mW.The remaining regulator must be limited to 375mW - 267.5mW or 107.5mW.

An advantage of the ILC7280 low-dropout voltage characteristic is that using the lowest possible input voltage can minimize power dissipation.

©2001 Fairchild Semiconductor Corporation

Package Dimensions
MSOP-8

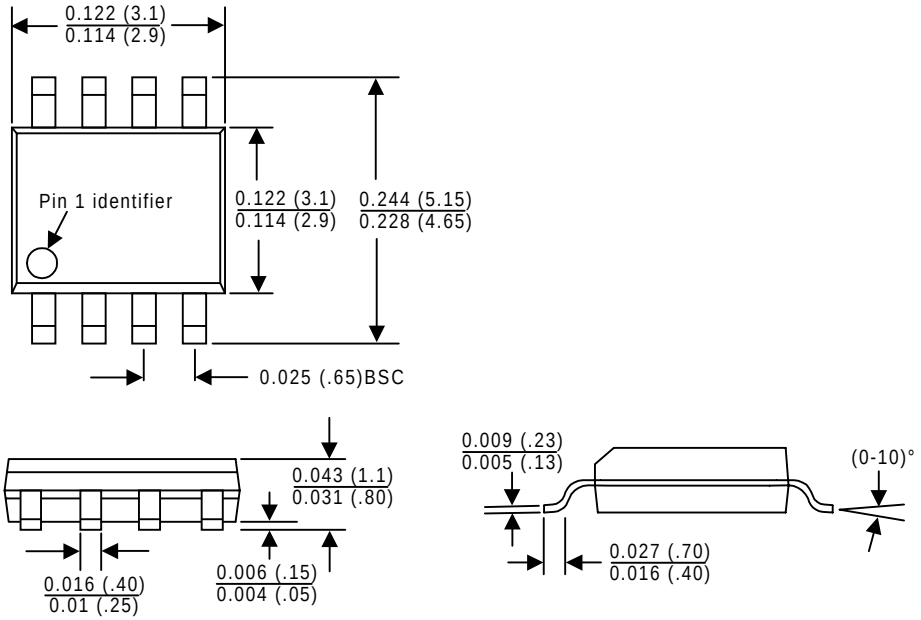

Ordering Information

Product Number	Package
ILC7280CS-2530	150mA 2.5V and 3.0V LDO regulators
ILC7280CS-3028	150mA 3.0V and 2.8V LDO regulators
ILC7280CS-2828	150mA 2.8V and 2.8V LDO regulators
ILC7280CS-3030	150mA 3.0V and 3.0V LDO regulators
ILC7280CS-3025	150mA 3.0V and 2.5V LDO regulators

Preliminary Information

DISCLAIMER

FAIRCHILD SEMICONDUCTOR RESERVES THE RIGHT TO MAKE CHANGES WITHOUT FURTHER NOTICE TO ANY PRODUCTS HEREIN TO IMPROVE RELIABILITY, FUNCTION OR DESIGN. FAIRCHILD DOES NOT ASSUME ANY LIABILITY ARISING OUT OF THE APPLICATION OR USE OF ANY PRODUCT OR CIRCUIT DESCRIBED HEREIN; NEITHER DOES IT CONVEY ANY LICENSE UNDER ITS PATENT RIGHTS, NOR THE RIGHTS OF OTHERS.

LIFE SUPPORT POLICY

FAIRCHILD'S PRODUCTS ARE NOT AUTHORIZED FOR USE AS CRITICAL COMPONENTS IN LIFE SUPPORT DEVICES OR SYSTEMS WITHOUT THE EXPRESS WRITTEN APPROVAL OF THE PRESIDENT OF FAIRCHILD SEMICONDUCTOR CORPORATION. As used herein:

1. Life support devices or systems are devices or systems which, (a) are intended for surgical implant into the body, or (b) support or sustain life, and (c) whose failure to perform when properly used in accordance with instructions for use provided in the labeling, can be reasonably expected to result in a significant injury of the user.
2. A critical component in any component of a life support device or system whose failure to perform can be reasonably expected to cause the failure of the life support device or system, or to affect its safety or effectiveness.

10/15/01 0.0m 001
Stock#DSxxxxxxxx
©2001 Fairchild Semiconductor Corporation