SCAS143 – OCTOBER 1990 – REVISED APRIL 1993

- **AND-Gated (Enable/Disable) Serial Inputs**
- **Fully Buffered Clock and Serial Inputs**
- **Direct Clear**
- **Fully Synchronous Data Transfers**
- **Flow-Through Architecture Optimizes PCB Layout**
- **Center-Pin V_{CC} and GND Pin Configurations Minimize High-Speed Switching Noise**
- ***EPIC*™ (Enhanced-Performance Implanted CMOS) 1-μm Process**
- **500-mA Typical Latch-Up Immunity at 125°C**
- **Package Options Include Plastic Small-Outline Packages and Standard Plastic 300-mil DIPs**

DW OR N PACKAGE
(TOP VIEW)

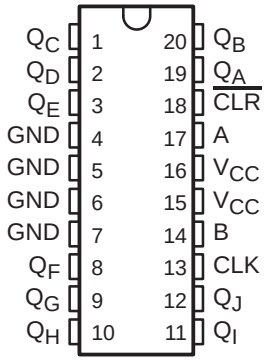

description

The 74AC11898 features AND-gated serial inputs and an asynchronous clear. The gated serial inputs (A and B) permit complete control over incoming data. A low at either input inhibits entry of new data and resets the first flip-flop to the low level on the rising edge of the next clock pulse. A high-level input enables the other input, which then determines the state of the first flip-flop. Data at the serial inputs may be changed while the clock is high or low provided the minimum setup and hold time requirements are met. Clocking occurs on the low-to-high transition of the clock input.

The 74AC11898 is characterized for operation from –40°C to 85°C.

FUNCTION TABLE

INPUTS				OUTPUTS			
$\overline{CLR}$	CLK	A	B	Q_A	Q_B	...	Q_J
L	X	X	X	L	L		L
H	L	X	X	Q_{A0}	Q_{B0}		Q_{JO}
H	↑	H	H	H	Q_{AN}		Q_{IN}
H	↑	L	X	L	Q_{AN}		Q_{IN}
H	↑	X	L	L	Q_{AN}		Q_{IN}

H = high level (steady state)
X = irrelevant (any input, including transitions)
↑ = transition from low to high level
Q_{A0}, Q_{B0}, Q_{J0} = the level of Q_A, Q_B, Q_J respectively, before the indicated steady-state input conditions were established.
Q_n, Q_{in} = the level or Q_A or Q_J before the most recent ↑ transition of the clock; indicates a one-bit shift.

EPIC is a trademark of Texas Instruments Incorporated.

PRODUCTION DATA information is current as of publication date. Products conform to specifications per the terms of Texas Instruments standard warranty. Production processing does not necessarily include testing of all parameters.

Copyright © 1993, Texas Instruments Incorporated

logic symbol†

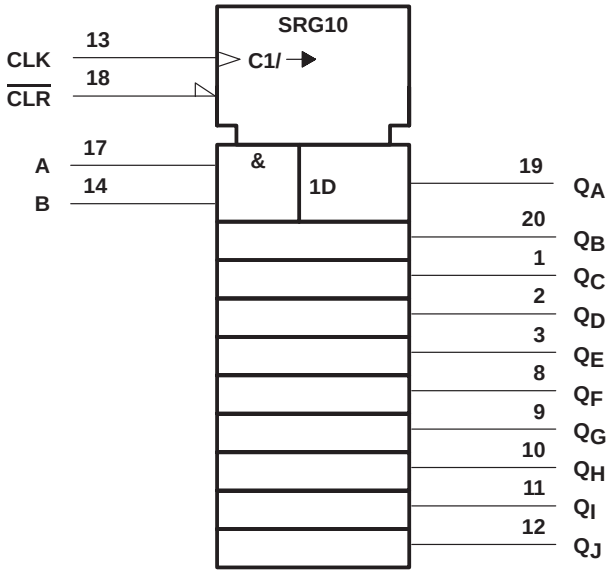

† This symbol is in accordance with ANSI/IEEE Std 91-1984 and IEC Publication 617-12.

logic diagram (positive logic)

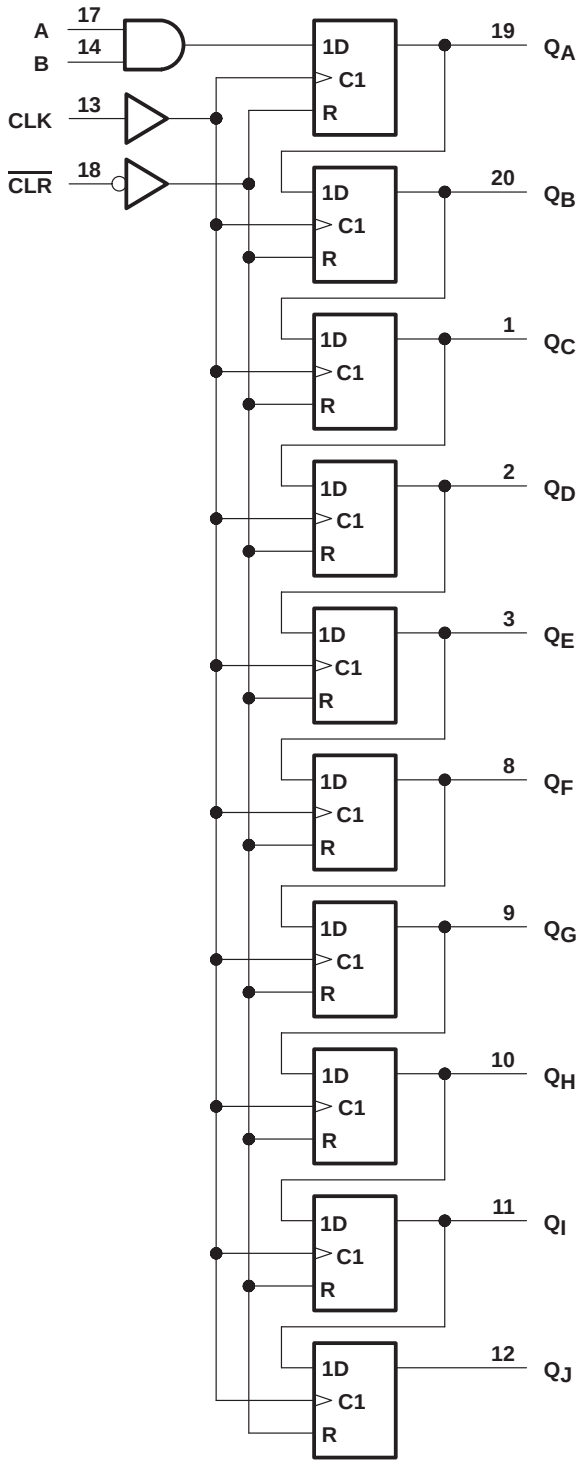

absolute maximum ratings over operating free-air temperature range (unless otherwise noted)†

Supply voltage range, V_{CC} . . . . . –0.5 V to 7 V
Input voltage range, V_I (see Note 1) . . . . . –0.5 V to V_{CC} + 0.5 V
Output voltage range, V_O (see Note 1) . . . . . –0.5 V to V_{CC} + 0.5 V
Input clamp current, I_{IK} (V_I < 0 or V_I > V_{CC}) . . . . . ±20 mA
Output clamp current, I_{OK} (V_O < 0 or V_O > V_{CC}) . . . . . ±50 mA
Continuous output current, I_O (V_O = 0 to V_{CC}) . . . . . ±50 mA
Continuous current through V_{CC} or GND . . . . . ±250 mA
Storage temperature range . . . . . –65°C to 150°C

† Stresses beyond those listed under “absolute maximum ratings” may cause permanent damage to the device. These are stress ratings only, and functional operation of the device at these or any other conditions beyond those indicated under “recommended operating conditions” is not implied. Exposure to absolute-maximum-rated conditions for extended periods may affect device reliability.
NOTE 1: The input and output voltage ratings may be exceeded if the input and output clamp-current ratings are observed.

recommended operating conditions (see Note 2)

			MIN	NOM	MAX	UNIT
V_{CC}	Supply voltage		3	5	5.5	V
V_{IH}	High-level input voltage	V_{CC} = 3 V	2.1			V
		V_{CC} = 4.5 V	3.15			
		V_{CC} = 5.5 V	3.85			
V_{IL}	Low-level input voltage	V_{CC} = 3 V			0.9	V
		V_{CC} = 4.5 V			1.35	
		V_{CC} = 5.5 V			1.65	
V_I	Input voltage		0		V_{CC}	V
V_O	Output voltage		0		V_{CC}	V
I_{OH}	High-level output current	V_{CC} = 3 V			–4	mA
		V_{CC} = 4.5 V			–24	
		V_{CC} = 5.5 V			–24	
I_{OL}	Low-level output current	V_{CC} = 3 V			12	mA
		V_{CC} = 4.5 V			24	
		V_{CC} = 5.5 V			24	
$\Delta t/\Delta v$	Input transition rise or fall rate		0		10	ns/V
T_A	Operating free-air temperature		–40		85	°C

NOTE 2: Unused or floating inputs must be held high or low.

electrical characteristics over recommended operating free-air temperature range (unless otherwise noted)

PARAMETER	TEST CONDITIONS	V_{CC}	TA = 25°C			MIN	MAX	UNIT
			MIN	TYP	MAX			
V_{OH}	I_{OH} = – 50 µA	3 V	2.9			2.9		V
		4.5 V	4.4			4.4		
		5.5 V	5.4			5.4		
	I_{OH} = – 4 mA	3 V	2.58			2.48		
	I_{OL} = – 24 mA	4.5 V	3.94			3.8		
		5.5 V	4.94			4.8		
	I_{OH} = –75 mA†	5.5 V				3.85		
V_{OL}	I_{OL} = 50 µA	3 V			0.1		0.1	V
		4.5 V			0.1		0.1	
		5.5 V			0.1		0.1	
	I_{OL} = 12 mA	3 V			0.36		0.44	
	I_{OL} = 24 mA	4.5 V			0.36		0.44	
		5.5 V			0.36		0.44	
	I_{OL} = 75 mA†	5.5 V					1.65	
I_I	$V_I = V_{CC}$ or GND	5.5 V			±0.1		±1	µA
I_{CC}	$V_I = V_{CC}$ or GND, I_O = 0	5.5 V			8		80	µA
C_i	$V_I = V_{CC}$ or GND	5 V		4				pF

† Not more than one output should be tested at a time, and the duration of the test should not exceed 10 ms.

timing requirements over recommended operating free-air temperature range, V_{CC} = 3.3 V ± 0.3 V (unless otherwise noted) (see Figure 1)

PARAMETER			T_A = 25°C		MIN	MAX	UNIT
			MIN	MAX			
f_{clock}	Clock frequency		0	40	0	40	ns
t_w	Pulse duration	$\overline{CLR}$ low	5		5		ns
		CLK high or low	12.5		12.5		
t_{su}	Setup time before CLK↑	Data	14		14		ns
		$\overline{CLR}$ inactive	1.5		1.5		
t_h	Hold time, data after CLK↑		0		0		ns

timing requirements over recommended operating free-air temperature range, V_{CC} = 5 V ± 0.5 V (unless otherwise noted) (see Figure 1)

PARAMETER			T_A = 25°C		MIN	MAX	UNIT
			MIN	MAX			
f_{clock}	Clock frequency		0	60	0	60	ns
t_w	Pulse duration	$\overline{CLR}$ low	4.5		4.5		ns
		CLK high or low	8.3		8.3		
t_{su}	Setup time before CLK↑	Data	8.5		8.5		ns
		$\overline{CLR}$ inactive	1.5		1.5		
t_h	Hold time, data after CLK↑		0		0		ns

switching characteristics over recommended operating free-air temperature range, V_{CC} = 3.3 V ± 0.3 V (unless otherwise noted) (see Figure 1)

PARAMETER	FROM (INPUT)	TO (OUTPUT)	T_A = 25°C			MIN	MAX	UNIT
			MIN	TYP	MAX			
f_{max}			40	60		40		MHz
t_{PHL}	$\overline{CLR}$	Any Q	4.1	9.4	11.7	4.1	13	ns
t_{PLH}	CLK	Any Q	3.3	8.2	10.7	3.3	11.9	ns
t_{PHL}			3.9	8.9	10.8	3.9	12.2	

switching characteristics over recommended operating free-air temperature range, V_{CC} = 5 V ± 0.5 V (unless otherwise noted) (see Figure 1)

PARAMETER	FROM (INPUT)	TO (OUTPUT)	T_A = 25°C			MIN	MAX	UNIT
			MIN	TYP	MAX			
f_{max}			60	90		60		MHz
t_{PHL}	$\overline{CLR}$	Any Q	3.8	6.7	9.1	3.8	10.3	ns
t_{PLH}	CLK	Any Q	2.7	5.5	7.9	2.7	8.1	ns
t_{PHL}			3.1	6.3	8.6	3.1	10	

operating characteristics, V_{CC} = 5 V, T_A = 25°C

PARAMETER		TEST CONDITIONS		TYP	UNIT
C_{pd}	Power dissipation capacitance	C_L = 50 pF,	f = 1 MHz	122	pF

PARAMETER MEASUREMENT INFORMATION

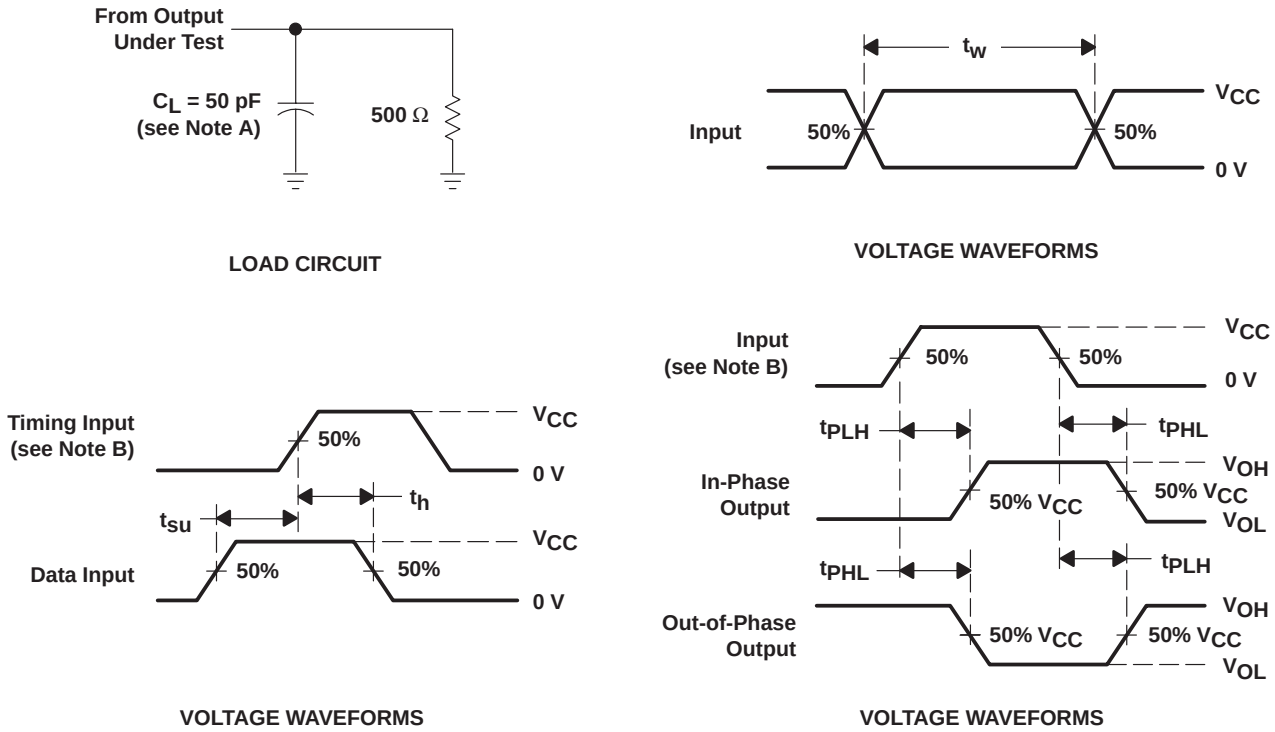

NOTES: A. C_L includes probe and jig capacitance.
B. All input pulses are supplied by generators having the following characteristics: PRR ≤ 10 MHz, Z_O = 50 Ω, t_r = 3 ns, t_f = 3 ns.
C. The outputs are measured one at a time with one input transition per measurement.

Figure 1. Load Circuit and Voltage Waveforms

IMPORTANT NOTICE

Texas Instruments and its subsidiaries (TI) reserve the right to make changes to their products or to discontinue any product or service without notice, and advise customers to obtain the latest version of relevant information to verify, before placing orders, that information being relied on is current and complete. All products are sold subject to the terms and conditions of sale supplied at the time of order acknowledgement, including those pertaining to warranty, patent infringement, and limitation of liability.

TI warrants performance of its semiconductor products to the specifications applicable at the time of sale in accordance with TI's standard warranty. Testing and other quality control techniques are utilized to the extent TI deems necessary to support this warranty. Specific testing of all parameters of each device is not necessarily performed, except those mandated by government requirements.

CERTAIN APPLICATIONS USING SEMICONDUCTOR PRODUCTS MAY INVOLVE POTENTIAL RISKS OF DEATH, PERSONAL INJURY, OR SEVERE PROPERTY OR ENVIRONMENTAL DAMAGE ("CRITICAL APPLICATIONS"). TI SEMICONDUCTOR PRODUCTS ARE NOT DESIGNED, AUTHORIZED, OR WARRANTED TO BE SUITABLE FOR USE IN LIFE-SUPPORT DEVICES OR SYSTEMS OR OTHER CRITICAL APPLICATIONS. INCLUSION OF TI PRODUCTS IN SUCH APPLICATIONS IS UNDERSTOOD TO BE FULLY AT THE CUSTOMER'S RISK.

In order to minimize risks associated with the customer's applications, adequate design and operating safeguards must be provided by the customer to minimize inherent or procedural hazards.

TI assumes no liability for applications assistance or customer product design. TI does not warrant or represent that any license, either express or implied, is granted under any patent right, copyright, mask work right, or other intellectual property right of TI covering or relating to any combination, machine, or process in which such semiconductor products or services might be or are used. TI's publication of information regarding any third party's products or services does not constitute TI's approval, warranty or endorsement thereof.

Copyright © 1998, Texas Instruments Incorporated