SLIS026A – JUNE 1994 – REVISED NOVEMBER 1994

- **Low $r_{DS(on)}$ . . . 0.4 Ω Typ**
- **High-Voltage Output . . . 60 V**
- **Pulsed Current . . . 3 A Per Channel**
- **Fast Commutation Speed**
- **Direct Logic-Level Interface**

DW PACKAGE
(TOP VIEW)

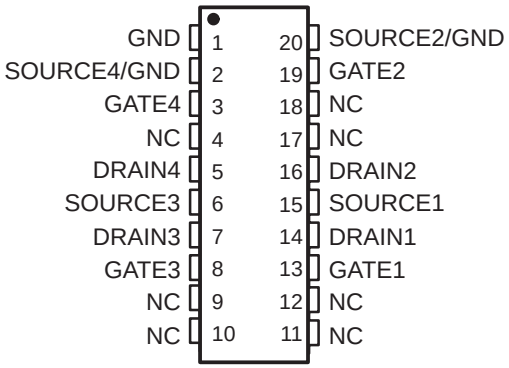

NC – No internal connection

NE PACKAGE
(TOP VIEW)

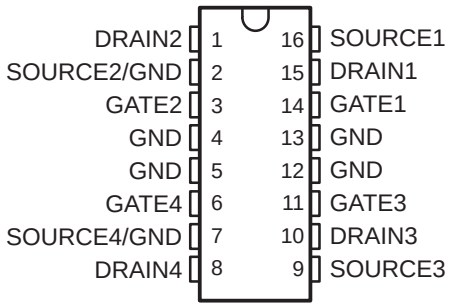

description

The TPIC5424L is a monolithic logic-level power DMOS array that consists of four electrically isolated N-channel enhancement-mode DMOS transistors, two of which are configured with a common source.

The TPIC5424L is offered in a 16-pin thermally enhanced dual-in-line (NE) package and a 20-pin wide-body surface-mount (DW) package. The TPIC5424L is characterized for operation over the case temperature range of –40°C to 125°C.

schematic

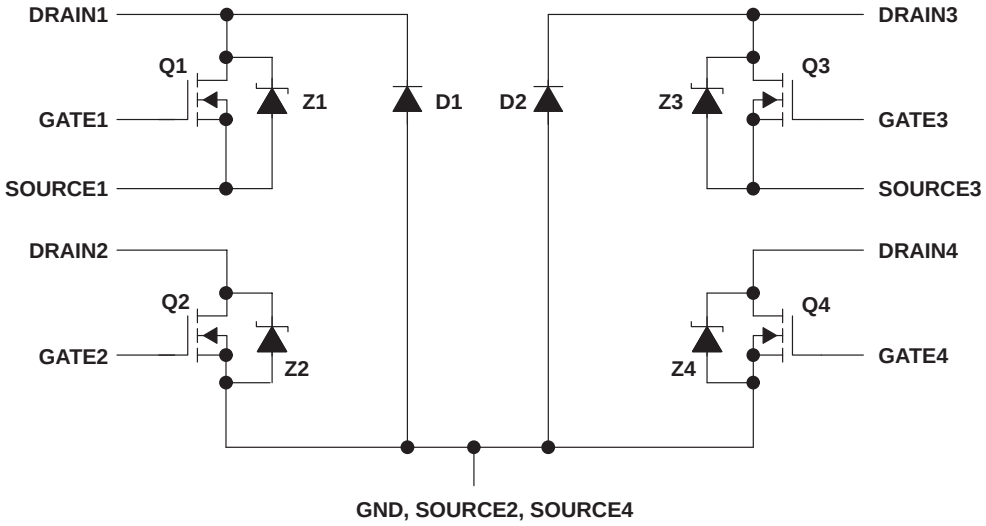

PRODUCTION DATA information is current as of publication date. Products conform to specifications per the terms of Texas Instruments standard warranty. Production processing does not necessarily include testing of all parameters.

Copyright © 1994, Texas Instruments Incorporated

absolute maximum ratings over operating case temperature range (unless otherwise noted)†

Drain-to-source voltage, V_{DS}	60 V
Source-to-GND voltage (Q1, Q3)	100 V
Drain-to-GND voltage (Q1, Q3)	100 V
Drain-to-GND voltage (Q2, Q4)	60 V
Gate-to-source voltage, V_{GS}	±20 V
Continuous drain current, each output, T_C = 25°C	1 A
Continuous source-to-drain diode current, T_C = 25°C	1 A
Pulsed drain current, each output, I_{max}, T_C = 25°C (see Note 1 and Figure 15)	3 A
Single-pulse avalanche energy, E_{AS}, T_C = 25°C (see Figure 4)	180 mJ
Continuous total dissipation	See Dissipation Rating Table
Operating virtual junction temperature range, T_J	–40°C to 150°C
Operating case temperature range, T_C	–40°C to 125°C
Storage temperature range	–65°C to 150°C
Lead temperature 1,6 mm (1/16 inch) from case for 10 seconds	260°C

† Stresses beyond those listed under “absolute maximum ratings” may cause permanent damage to the device. These are stress ratings only, and functional operation of the device at these or any other conditions beyond those indicated under “recommended operating conditions” is not implied. Exposure to absolute-maximum-rated conditions for extended periods may affect device reliability.

NOTE 1: Pulse duration = 10 ms and duty cycle = 2%.

DISSIPATION RATING TABLE

PACKAGE	$T_C \le 25°C$ POWER RATING	DERATING FACTOR ABOVE T_C = 25°C	T_C = 125°C POWER RATING
DW	1389 mW	11.1 mW/°C	279 mW
NE	2075 mW	16.6 mW/°C	415 mW

electrical characteristics, T_C = 25°C (unless otherwise noted)

PARAMETER		TEST CONDITIONS		MIN	TYP	MAX	UNIT
$V_{(BR)DSX}$	Drain-to-source breakdown voltage	I_D = 250 µA, V_{GS} = 0		60			V
$V_{GS(th)}$	Gate-to-source threshold voltage	I_D = 1 mA, V_{DS} = V_{GS}, See Figure 5		1.5	1.85	2.2	V
$V_{(BR)}$	Reverse drain-to-GND breakdown voltage (across D1, D2)	Drain-to-GND current = 250 µA		100			V
$V_{DS(on)}$	Drain-to-source on-state voltage	I_D = 1 A, V_{GS} = 5 V, See Notes 2 and 3			0.4	0.48	V
$V_{F(SD)}$	Forward on-state voltage, source-to-drain	I_S = 1 A, V_{GS} = 0 (Z1, Z2, Z3, Z4), See Notes 2 and 3 and Figure 12			1	1.2	V
V_F	Forward on-state voltage, GND-to-drain	I_D = 1 A (D1, D2), See Notes 2 and 3			4.6		V
I_{DSS}	Zero-gate-voltage drain current	V_{DS} = 48 V, V_{GS} = 0	T_C = 25°C		0.05	1	µA
			T_C = 125°C		0.5	10	
I_{GSSF}	Forward gate current, drain short circuited to source	V_{GS} = 5 V, V_{DS} = 0			10	100	nA
I_{GSSR}	Reverse gate current, drain short circuited to source	V_{SG} = 5 V, V_{DS} = 0			10	100	nA
I_{lkg}	Leakage current, drain-to-GND	V_{DGND} = 48 V (D1, D2)	T_C = 25°C		0.05	1	µA
			T_C = 125°C		0.5	10	
$r_{DS(on)}$	Static drain-to-source on-state resistance	V_{GS} = 5 V, I_D = 1 A, See Notes 2 and 3 and Figures 6 and 7	T_C = 25°C		0.4	0.48	Ω
			T_C = 125°C		0.65	0.68	
g_{fs}	Forward transconductance	V_{DS} = 15 V, I_D = 0.5 A, See Notes 2 and 3 and Figure 9		1.25	1.39		S
C_{iss}	Short-circuit input capacitance, common source	V_{DS} = 25 V, f = 1 MHz, V_{GS} = 0, See Figure 11			220	275	pF
C_{oss}	Short-circuit output capacitance, common source				120	150	
C_{rss}	Short-circuit reverse-transfer capacitance, common source				100	125	

NOTES: 2. Technique should limit $T_J – T_C$ to 10°C maximum.
3. These parameters are measured with voltage-sensing contacts separate from the current-carrying contacts.

source-to-drain and GND-to-drain diode characteristics, T_C = 25°C

PARAMETER		TEST CONDITIONS		MIN	TYP	MAX	UNIT
t_{rr}	Reverse-recovery time	I_S =0.5 A, V_{GS} = 0, See Figures 1 and 14	V_{DS} = 48 V, di/dt = 100 A/µs, Z1 and Z3		55		ns
			Z2 and Z4		150		
			D1 and D2		200		
Q_{RR}	Total diode charge		Z1 and Z3		0.06		µC
			Z2 and Z4		0.3		
			D1 and D2		0.7		

resistive-load switching characteristics, T_C = 25°C

PARAMETER		TEST CONDITIONS	MIN	TYP	MAX	UNIT
$t_{d(on)}$	Turn-on delay time	V_{DD} = 25 V, R_L = 25 Ω, t_{en} = 10 ns, t_{dis} = 10 ns, See Figure 2		34	68	ns
$t_{d(off)}$	Turn-off delay time			40	82	
t_r	Rise time			21	42	
t_f	Fall time			25	50	
Q_g	Total gate charge	V_{DS} = 48 V, I_D = 1 A, V_{GS} = 10 V, See Figure 3		3.9	5	nC
$Q_{gs(th)}$	Threshold gate-to-source charge			0.55	0.8	
Q_{gd}	Gate-to-drain charge			2.5	3.6	
L_D	Internal drain inductance			5		nH
L_S	Internal source inductance			5		
R_g	Internal gate resistance			0.25		Ω

thermal resistance

PARAMETER			TEST CONDITIONS	MIN	TYP	MAX	UNIT
$R_{\theta JA}$	Junction-to-ambient thermal resistance (see Note 4)	DW package	All outputs with equal power		90		°C/W
		NE package			60		
$R_{\theta JP}$	Junction-to-pin thermal resistance	DW package			30		°C/W
		NE package			25		

NOTE 4: Package mounted on an FR4 printed-circuit board with no heat sink

PARAMETER MEASUREMENT INFORMATION

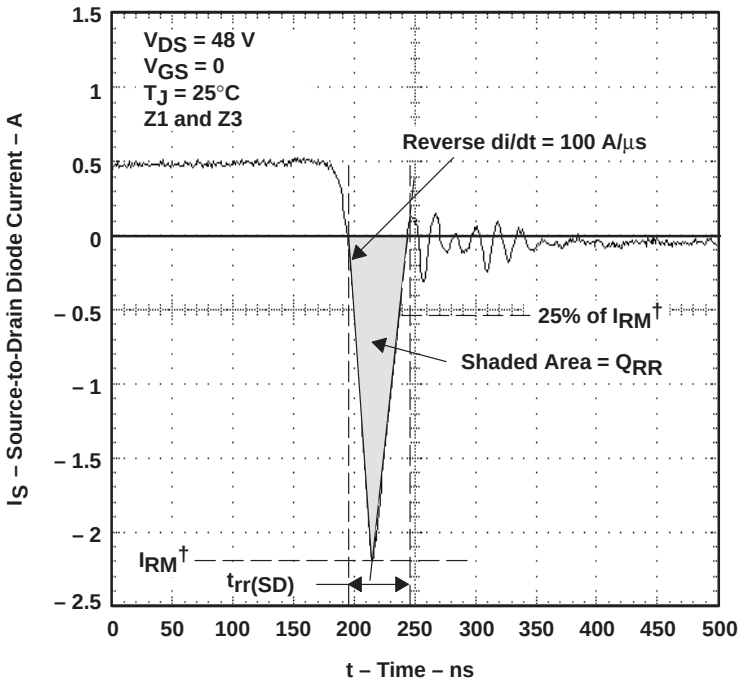

† I_{RM} = maximum recovery current

NOTE A. The above waveform is representative of Z2, Z4, D1, and D2 in shape only.

Figure 1. Reverse-Recovery-Current Waveform of Source-to-Drain Diode

PARAMETER MEASUREMENT INFORMATION

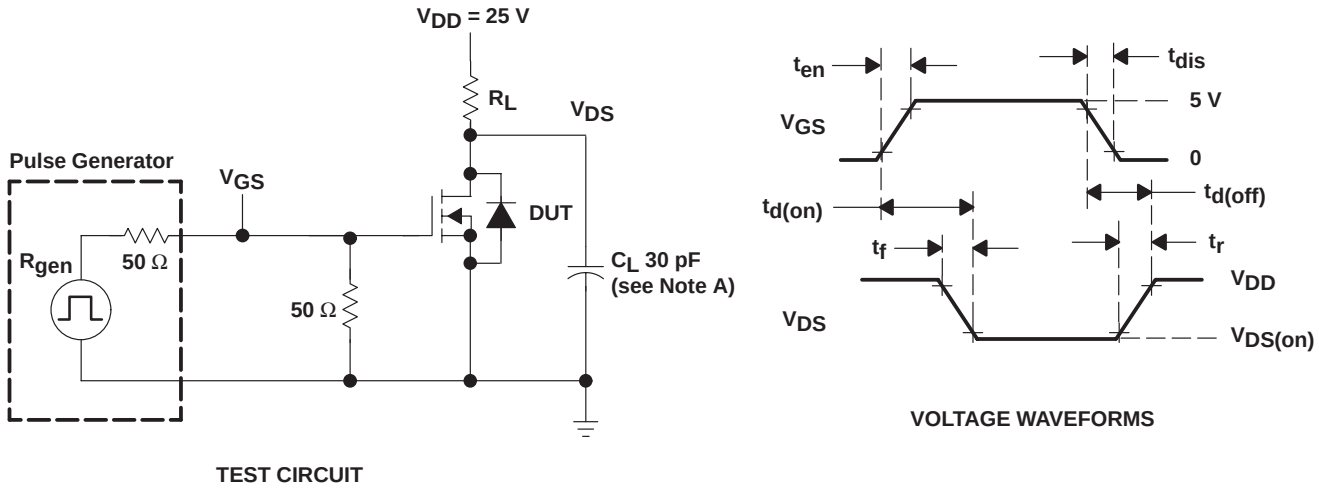

NOTE A: C_L includes probe and jig capacitance.

Figure 2. Resistive-Switching Test Circuit and Voltage Waveforms

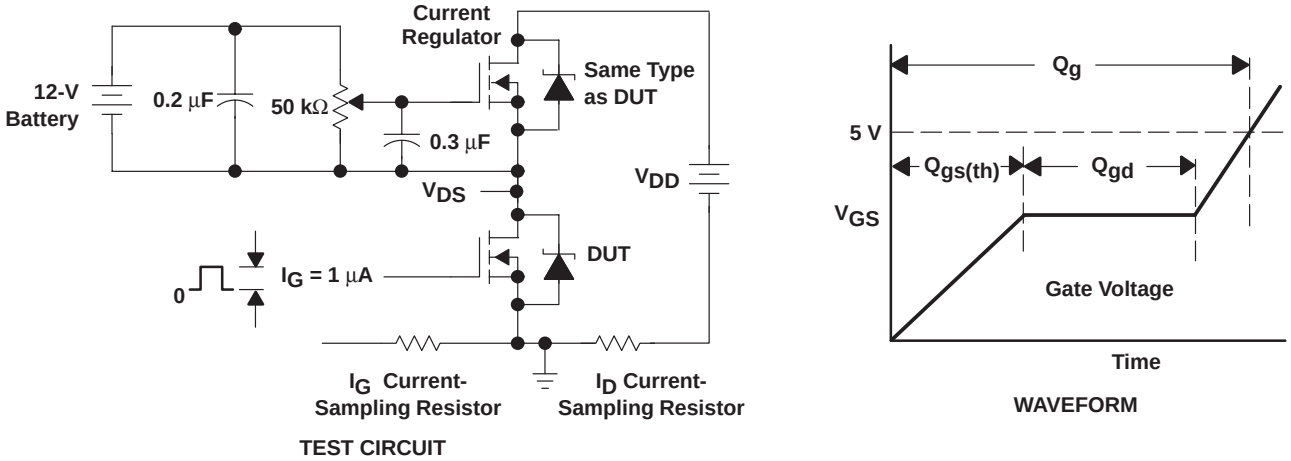

Figure 3. Gate-Charge Test Circuit and Waveform

PARAMETER MEASUREMENT INFORMATION

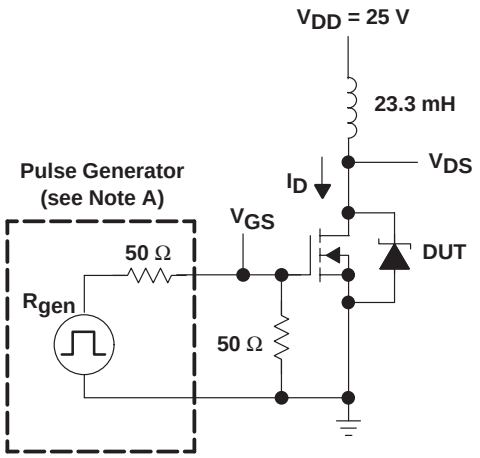

TEST CIRCUIT

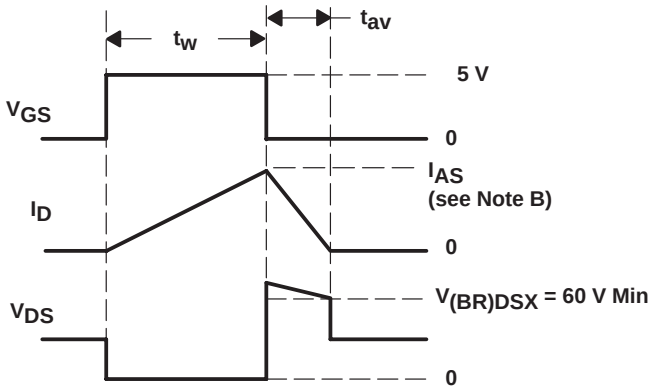

VOLTAGE AND CURRENT WAVEFORMS

NOTES: A. The pulse generator has the following characteristics: $t_r \leq 10$ ns, $t_f \leq 10$ ns, $Z_O = 50\ \Omega$.
B. Input pulse duration (t_w) is increased until peak current $I_{AS} = 3$ A.

Energy test level is defined as $E_{AS} = \dfrac{I_{AS} \times V_{(BR)DSX} \times t_{av}}{2} = 180$ mJ.

Figure 4. Single-Pulse Avalanche-Energy Test Circuit and Waveforms

TYPICAL CHARACTERISTICS

GATE-TO-SOURCE THRESHOLD VOLTAGE vs JUNCTION TEMPERATURE

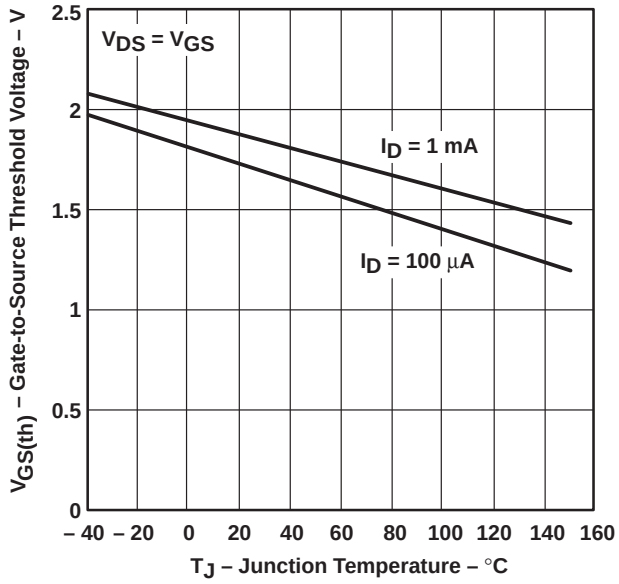

Figure 5

STATIC DRAIN-TO-SOURCE ON-STATE RESISTANCE vs JUNCTION TEMPERATURE

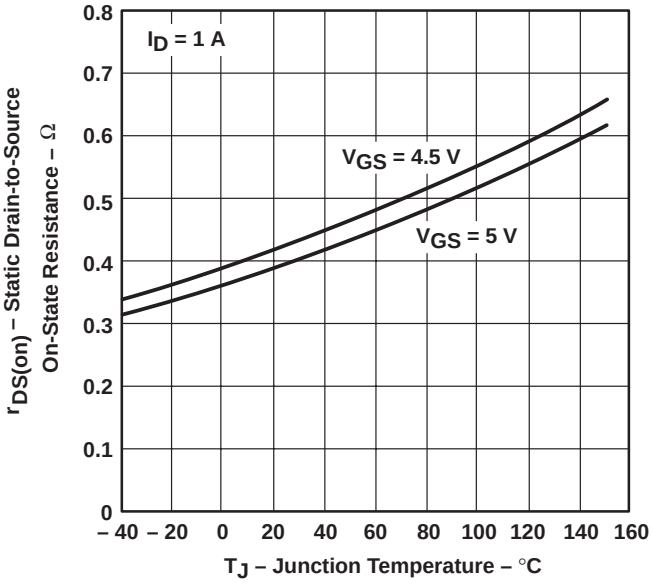

Figure 6

TYPICAL CHARACTERISTICS

STATIC DRAIN-TO-SOURCE ON-STATE RESISTANCE vs DRAIN CURRENT

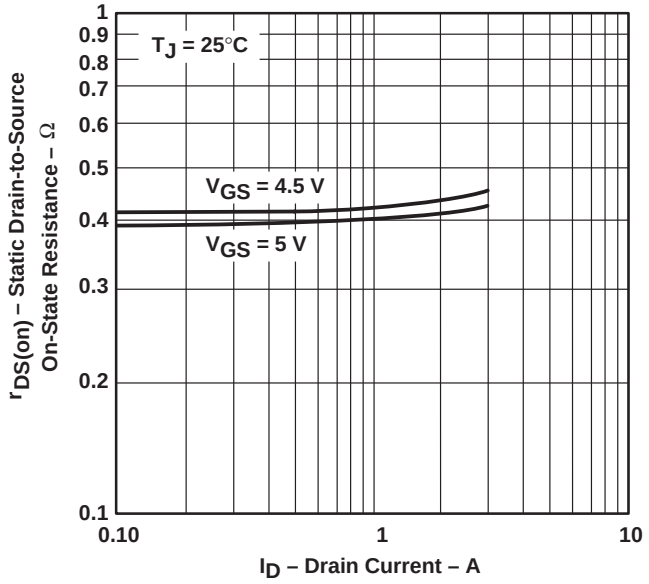

Figure 7

DRAIN CURRENT vs DRAIN-TO-SOURCE VOLTAGE

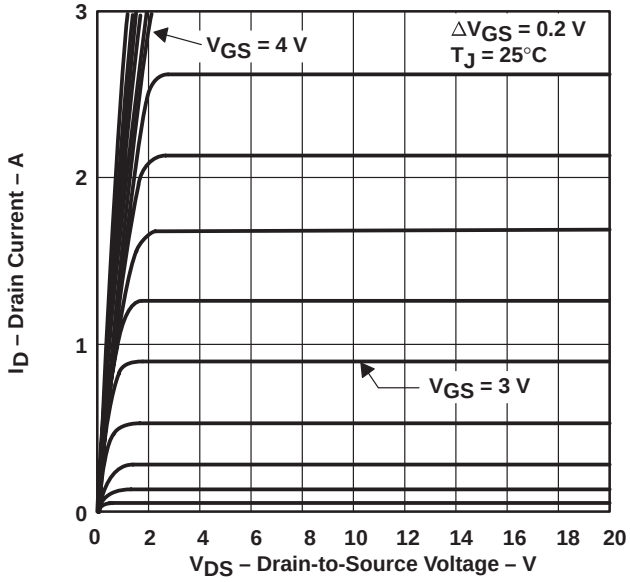

Figure 8

DISTRIBUTION OF FORWARD TRANSCONDUCTANCE

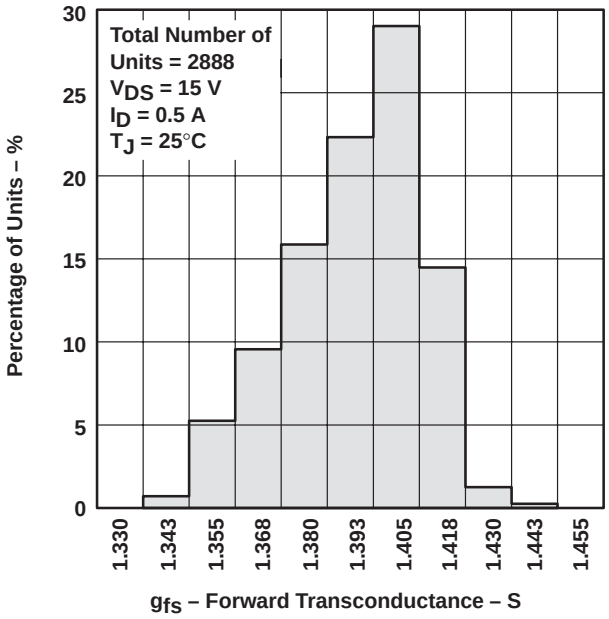

Figure 9

DRAIN CURRENT vs GATE-TO-SOURCE VOLTAGE

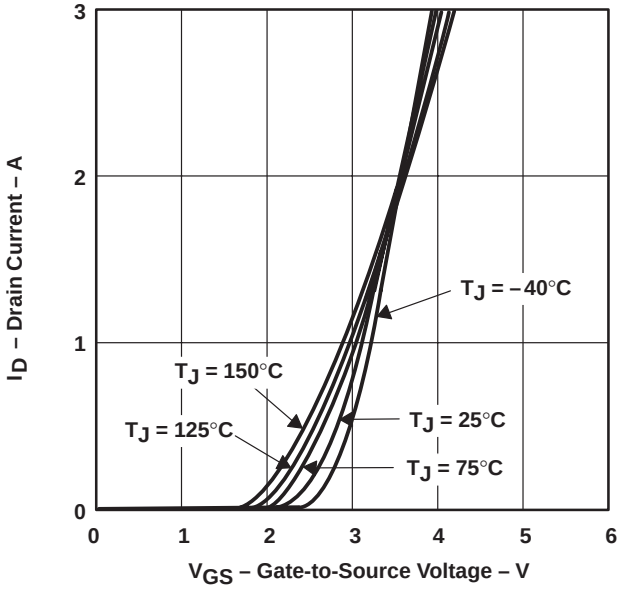

Figure 10

TYPICAL CHARACTERISTICS

CAPACITANCE vs DRAIN-TO-SOURCE VOLTAGE

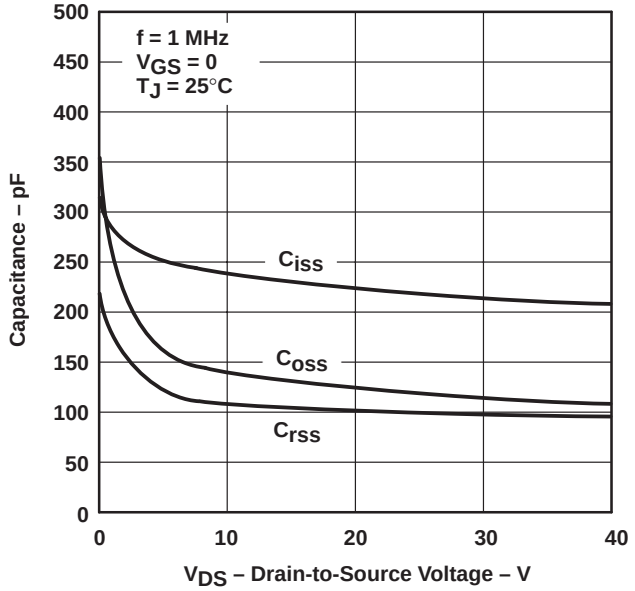

Figure 11

SOURCE-TO-DRAIN DIODE CURRENT vs SOURCE-TO-DRAIN VOLTAGE

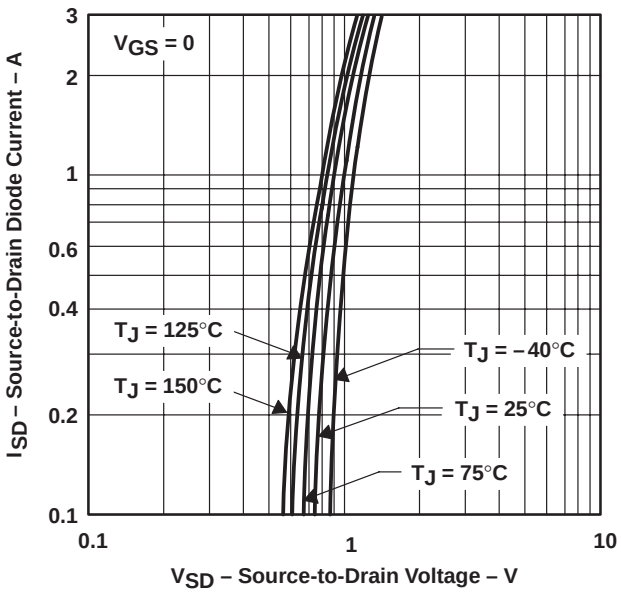

Figure 12

GATE-TO-SOURCE VOLTAGE vs GATE CHARGE

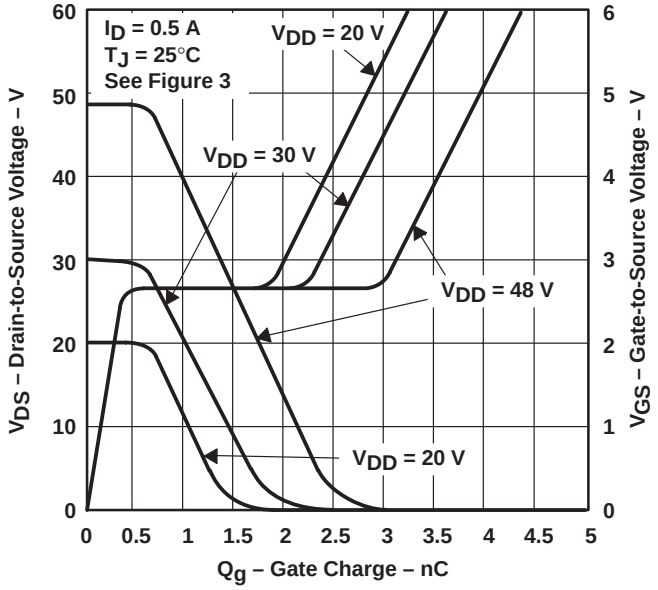

Figure 13

REVERSE-RECOVERY TIME vs REVERSE di/dt

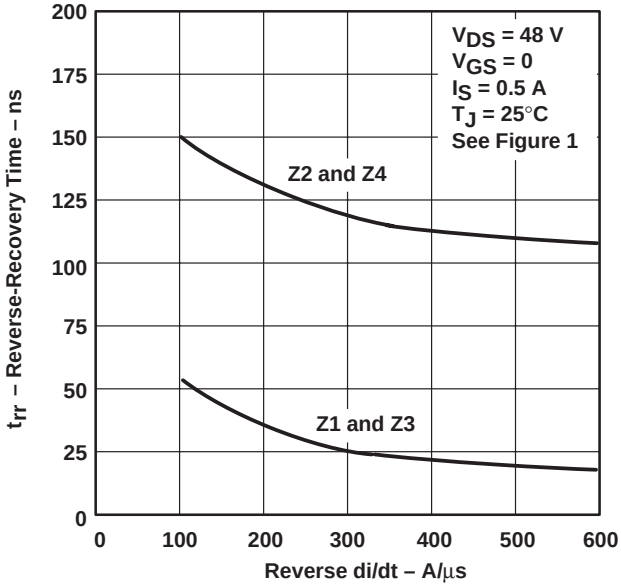

Figure 14

THERMAL INFORMATION

MAXIMUM DRAIN CURRENT vs DRAIN-TO-SOURCE VOLTAGE

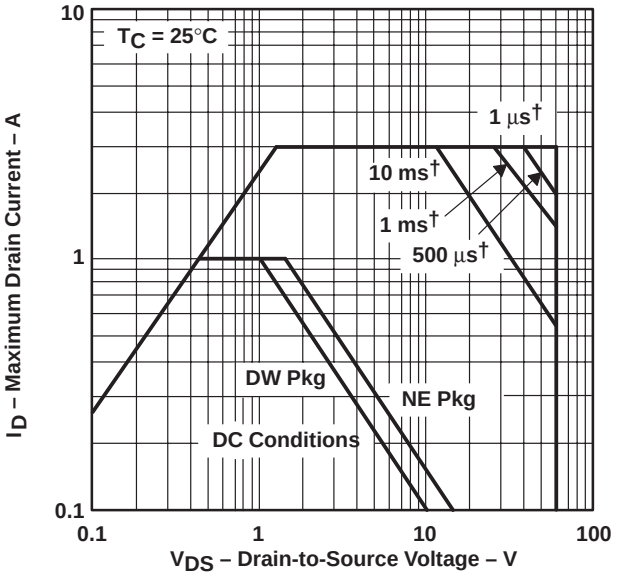

† Less than 2% duty cycle

Figure 15

MAXIMUM PEAK-AVALANCHE CURRENT vs TIME DURATION OF AVALANCHE

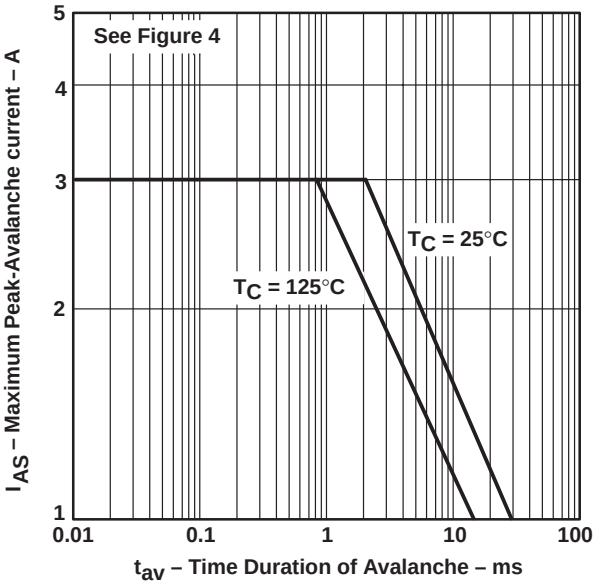

Figure 16

THERMAL INFORMATION

NE PACKAGE†
NORMALIZED JUNCTION-TO-AMBIENT THERMAL RESISTANCE
vs
PULSE DURATION

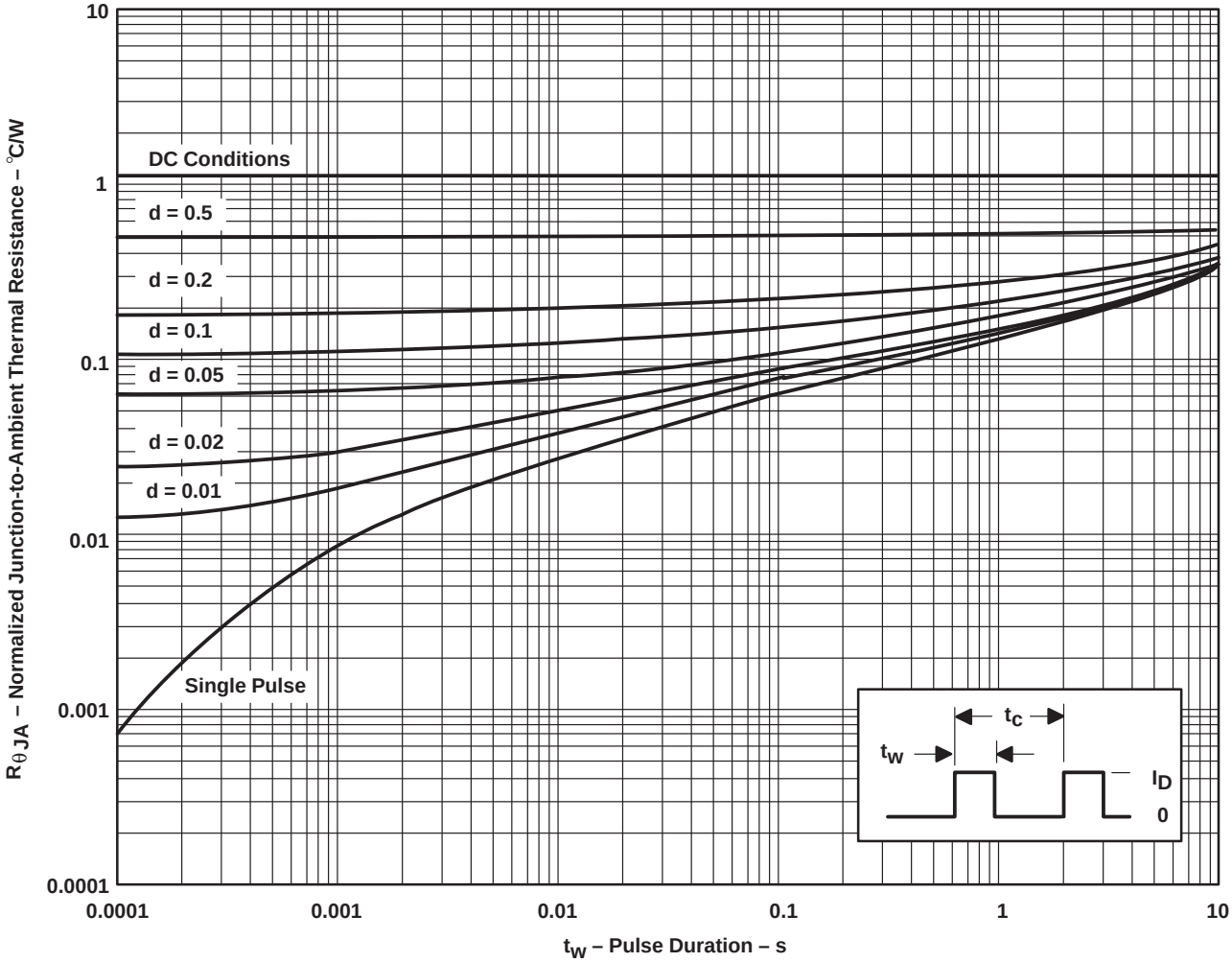

† Device mounted on FR4 printed-circuit board with no heat sink

NOTES: $Z_{\theta A}(t) = r(t)\ R_{\theta JA}$
t_W = pulse duration
t_C = cycle time
d = duty cycle = t_W/t_C

Figure 17

THERMAL INFORMATION

DW PACKAGE†
NORMALIZED JUNCTION-TO-AMBIENT THERMAL RESISTANCE
vs
PULSE DURATION

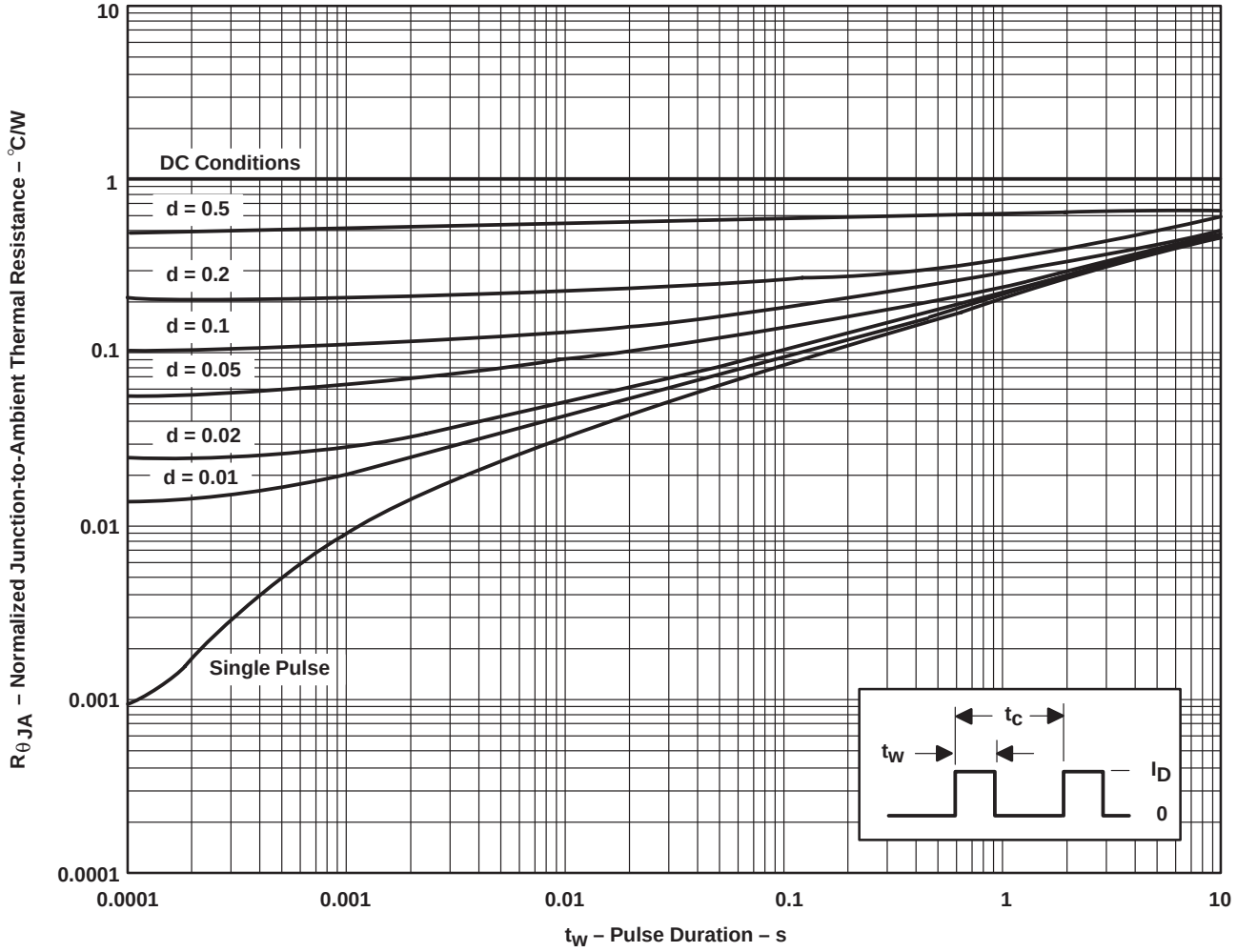

† Device mounted on FR4 printed-circuit board with no heat sink

NOTES: $Z_{\theta A}(t) = r(t)\ R_{\theta JA}$
t_W = pulse duration
t_C = cycle time
d = duty cycle = t_W/t_C

Figure 18

IMPORTANT NOTICE

Texas Instruments and its subsidiaries (TI) reserve the right to make changes to their products or to discontinue any product or service without notice, and advise customers to obtain the latest version of relevant information to verify, before placing orders, that information being relied on is current and complete. All products are sold subject to the terms and conditions of sale supplied at the time of order acknowledgement, including those pertaining to warranty, patent infringement, and limitation of liability.

TI warrants performance of its semiconductor products to the specifications applicable at the time of sale in accordance with TI's standard warranty. Testing and other quality control techniques are utilized to the extent TI deems necessary to support this warranty. Specific testing of all parameters of each device is not necessarily performed, except those mandated by government requirements.

CERTAIN APPLICATIONS USING SEMICONDUCTOR PRODUCTS MAY INVOLVE POTENTIAL RISKS OF DEATH, PERSONAL INJURY, OR SEVERE PROPERTY OR ENVIRONMENTAL DAMAGE ("CRITICAL APPLICATIONS"). TI SEMICONDUCTOR PRODUCTS ARE NOT DESIGNED, AUTHORIZED, OR WARRANTED TO BE SUITABLE FOR USE IN LIFE-SUPPORT DEVICES OR SYSTEMS OR OTHER CRITICAL APPLICATIONS. INCLUSION OF TI PRODUCTS IN SUCH APPLICATIONS IS UNDERSTOOD TO BE FULLY AT THE CUSTOMER'S RISK.

In order to minimize risks associated with the customer's applications, adequate design and operating safeguards must be provided by the customer to minimize inherent or procedural hazards.

TI assumes no liability for applications assistance or customer product design. TI does not warrant or represent that any license, either express or implied, is granted under any patent right, copyright, mask work right, or other intellectual property right of TI covering or relating to any combination, machine, or process in which such semiconductor products or services might be or are used. TI's publication of information regarding any third party's products or services does not constitute TI's approval, warranty or endorsement thereof.

Copyright © 1998, Texas Instruments Incorporated