PIC16F7X

28/40-Pin 8-Bit CMOS FLASH Microcontrollers

Devices Included in this Data Sheet:

- PIC16F73
- PIC16F74
- PIC16F76
- PIC16F77

Microcontroller Core Features:

- High-performance RISC CPU
- Only 35 single word instructions to learn
- All single cycle instructions except for program branches which are two cycle
- Operating speed: DC - 20 MHz clock input
  DC - 200 ns instruction cycle
- Up to 8K x 14 words of FLASH Program Memory, Up to 368 x 8 bytes of Data Memory (RAM)
- Pinout compatible to the PIC16C73B/74B/76/77
- Pinout compatible to the PIC16F873/874/876/877
- Interrupt capability (up to 12 sources)
- Eight level deep hardware stack
- Direct, Indirect and Relative Addressing modes
- Power-on Reset (POR)
- Power-up Timer (PWRT) and Oscillator Start-up Timer (OST)
- Watchdog Timer (WDT) with its own on-chip RC oscillator for reliable operation
- Programmable code protection
- Power saving SLEEP mode
- Selectable oscillator options
- Low power, high speed CMOS FLASH technology
- Fully static design
- In-Circuit Serial Programming™ (ICSP) via two pins
- Processor read access to program memory
- Wide operating voltage range: 2.0V to 5.5V
- High Sink/Source Current: 25 mA
- Industrial temperature range
- Low power consumption:
  - < 2 mA typical @ 5V, 4 MHz
  - 20 µA typical @ 3V, 32 kHz
  - < 1 µA typical standby current

Pin Diagram

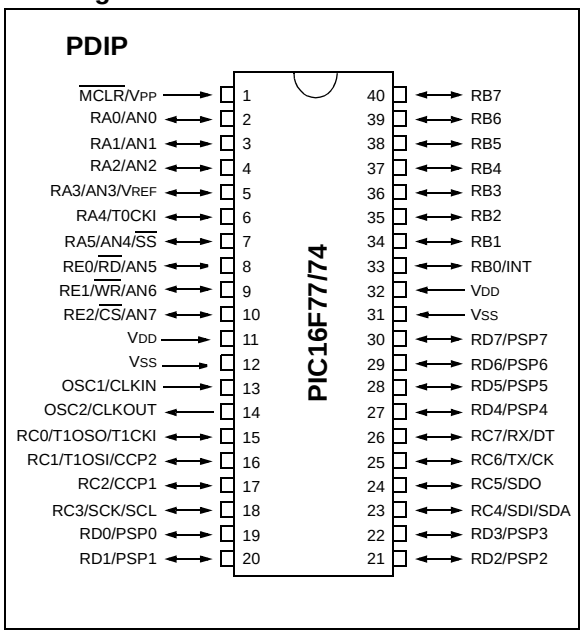

Peripheral Features:

- Timer0: 8-bit timer/counter with 8-bit prescaler
- Timer1: 16-bit timer/counter with prescaler, can be incremented during SLEEP via external crystal/clock
- Timer2: 8-bit timer/counter with 8-bit period register, prescaler and postscaler
- Two Capture, Compare, PWM modules
  - Capture is 16-bit, max. resolution is 12.5 ns
  - Compare is 16-bit, max. resolution is 200 ns
  - PWM max. resolution is 10-bit
- 8-bit multi-channel Analog-to-Digital converter
- Synchronous Serial Port (SSP) with SPI™ (Master mode) and I^2C™ (Slave)
- Universal Synchronous Asynchronous Receiver Transmitter (USART/SCI)
- Parallel Slave Port (PSP) 8-bits wide, with external RD, WR and CS controls (40/44-pin only)
- Brown-out detection circuitry for Brown-out Reset (BOR)

© 2000 Microchip Technology Inc.

Pin Diagrams

DIP, SOIC, SSOP

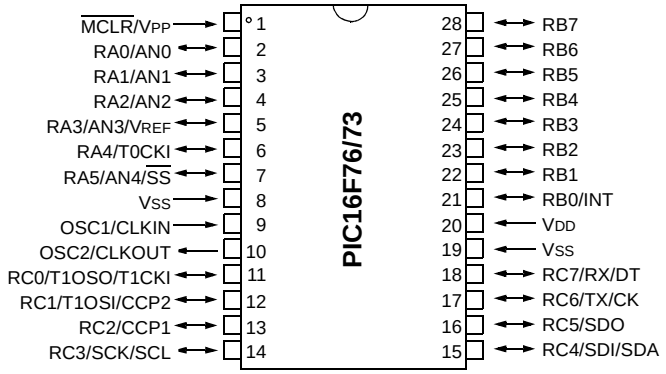

PLCC

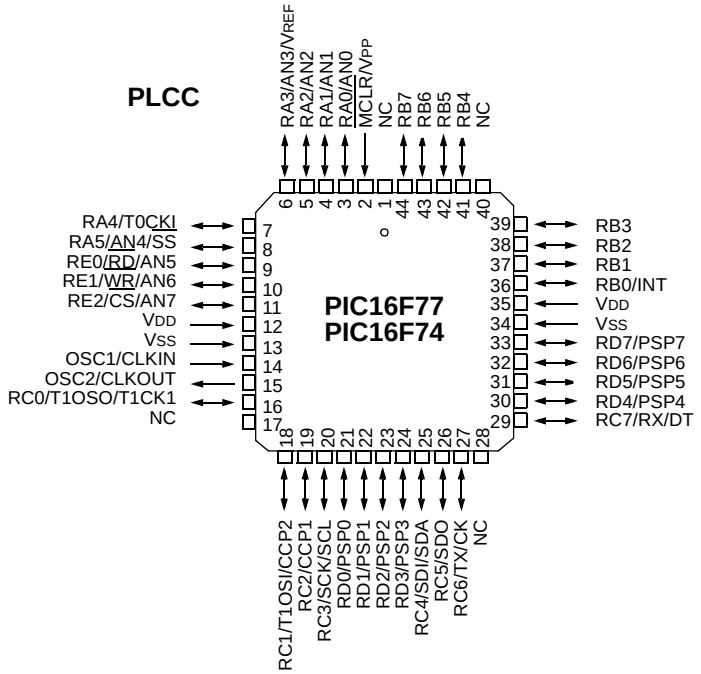

QFP

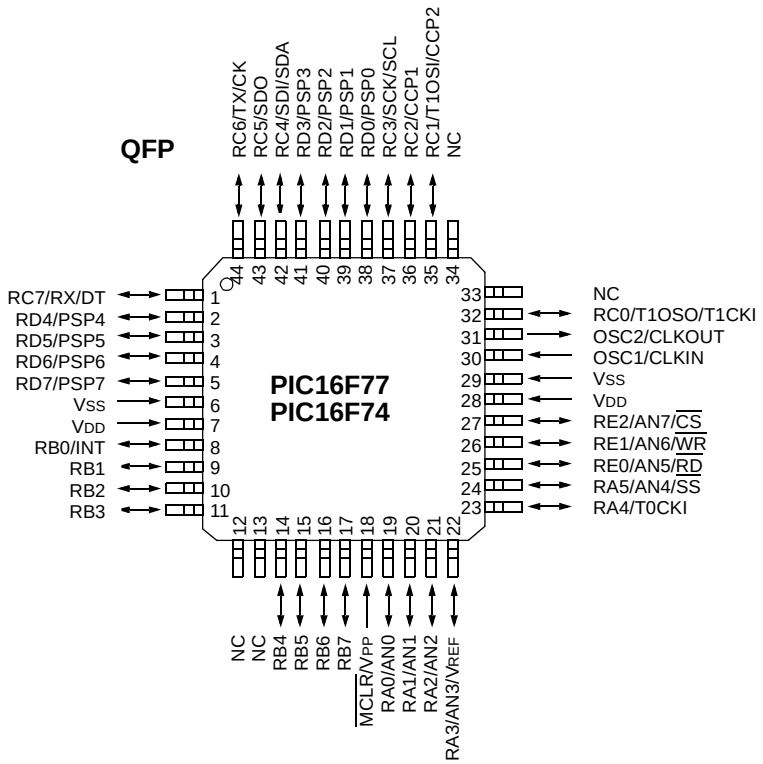

 © 2000 Microchip Technology Inc.

Key Features PICmicro™ Mid-Range Reference Manual (DS33023)	PIC16F73	PIC16F74	PIC16F76	PIC16F77
Operating Frequency	DC - 20 MHz	DC - 20 MHz	DC - 20 MHz	DC - 20 MHz
RESETS (and Delays)	POR, BOR (PWRT, OST)	POR, BOR (PWRT, OST)	POR, BOR (PWRT, OST)	POR, BOR (PWRT, OST)
FLASH Program Memory (14-bit words, 100 E/W cycles)	4K	4K	8K	8K
Data Memory (bytes)	192	192	368	368
Interrupts	11	12	11	12
I/O Ports	Ports A,B,C	Ports A,B,C,D,E	Ports A,B,C	Ports A,B,C,D,E
Timers	3	3	3	3
Capture/Compare/PWM Modules	2	2	2	2
Serial Communications	SSP, USART	SSP, USART	SSP, USART	SSP, USART
Parallel Communications	—	PSP	—	PSP
8-bit Analog-to-Digital Module	5 Input Channels	8 Input Channels	5 Input Channels	8 Input Channels
Instruction Set	35 Instructions	35 Instructions	35 Instructions	35 Instructions

Table of Contents

1.0 Device Overview 5
2.0 Memory Organization 11
3.0 I/O Ports 29
4.0 Reading Program Memory 41
5.0 Timer0 Module 45
6.0 Timer1 Module 49
7.0 Timer2 Module 53
8.0 Capture/Compare/PWM Modules 55
9.0 Synchronous Serial Port (SSP) Module 61
10.0 Universal Synchronous Asynchronous Receiver Transmitter (USART) 73
11.0 Analog-to-Digital Converter (A/D) Module 89
12.0 Special Features of the CPU 95
13.0 Instruction Set Summary 111
14.0 Development Support 119
15.0 Electrical Characteristics 125
16.0 DC and AC Characteristics Graphs and Tables 147
17.0 Packaging Information 149
Appendix A: Revision History 157
Appendix B: Device Differences 157
Appendix C: Conversion Considerations 157
Index 159
On-Line Support 165
Reader Response 166
PIC16F7X Product Identification System 167

TO OUR VALUED CUSTOMERS

It is our intention to provide our valued customers with the best documentation possible to ensure successful use of your Microchip products. To this end, we will continue to improve our publications to better suit your needs. Our publications will be refined and enhanced as new volumes and updates are introduced.

If you have any questions or comments regarding this publication, please contact the Marketing Communications Department via E-mail at **docerrors@mail.microchip.com** or fax the **Reader Response Form** in the back of this data sheet to (480) 786-7578. We welcome your feedback.

Most Current Data Sheet

To obtain the most up-to-date version of this data sheet, please register at our Worldwide Web site at:

http://www.microchip.com

You can determine the version of a data sheet by examining its literature number found on the bottom outside corner of any page. The last character of the literature number is the version number, (e.g., DS30000A is version A of document DS30000).

Errata

An errata sheet, describing minor operational differences from the data sheet and recommended workarounds, may exist for current devices. As device/documentation issues become known to us, we will publish an errata sheet. The errata will specify the revision of silicon and revision of document to which it applies.

To determine if an errata sheet exists for a particular device, please check with one of the following:

- Microchip's Worldwide Web site; http://www.microchip.com
- Your local Microchip sales office (see last page)
- The Microchip Corporate Literature Center; U.S. FAX: (480) 786-7277

When contacting a sales office or the literature center, please specify which device, revision of silicon and data sheet (include literature number) you are using.

Customer Notification System

Register on our web site at **www.microchip.com/cn** to receive the most current information on all of our products.

 © 2000 Microchip Technology Inc.

1.0 DEVICE OVERVIEW

This document contains device specific information. Additional information may be found in the PICmicro™ Mid-Range Reference Manual (DS33023), which may be obtained from your local Microchip Sales Representative or downloaded from the Microchip web site. The Reference Manual should be considered a complementary document to this data sheet, and is highly recommended reading for a better understanding of the device architecture and operation of the peripheral modules.

There are four devices (PIC16F73, PIC16F74, PIC16F76 and PIC16F77) covered by this data sheet. The PIC16F76/73 devices are available in 28-pin packages and the PIC16F77/74 devices are available in 40-pin packages. The 28-pin devices do not have a Parallel Slave Port implemented.

The following two figures are device block diagrams sorted by pin number; 28-pin for Figure 1-1 and 40-pin for Figure 1-2. The 28-pin and 40-pin pinouts are listed in Table 1-1 and Table 1-2, respectively.

FIGURE 1-1: PIC16F73 AND PIC16F76 BLOCK DIAGRAM

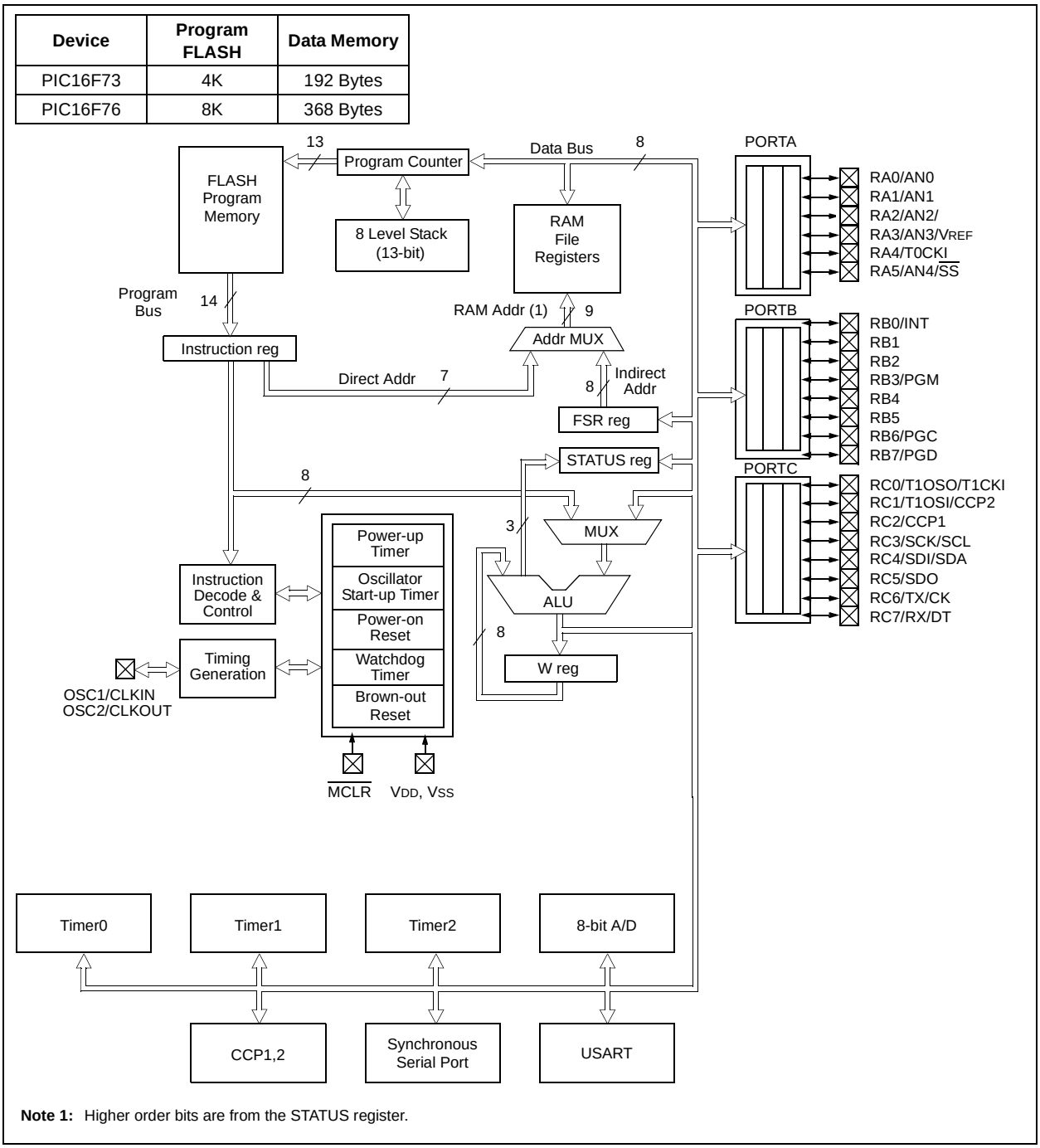

Device	Program FLASH	Data Memory
PIC16F73	4K	192 Bytes
PIC16F76	8K	368 Bytes

Note 1: Higher order bits are from the STATUS register.

FIGURE 1-2: PIC16F74 AND PIC16F77 BLOCK DIAGRAM

Device	Program FLASH	Data Memory
PIC16F74	4K	192 Bytes
PIC16F77	8K	368 Bytes

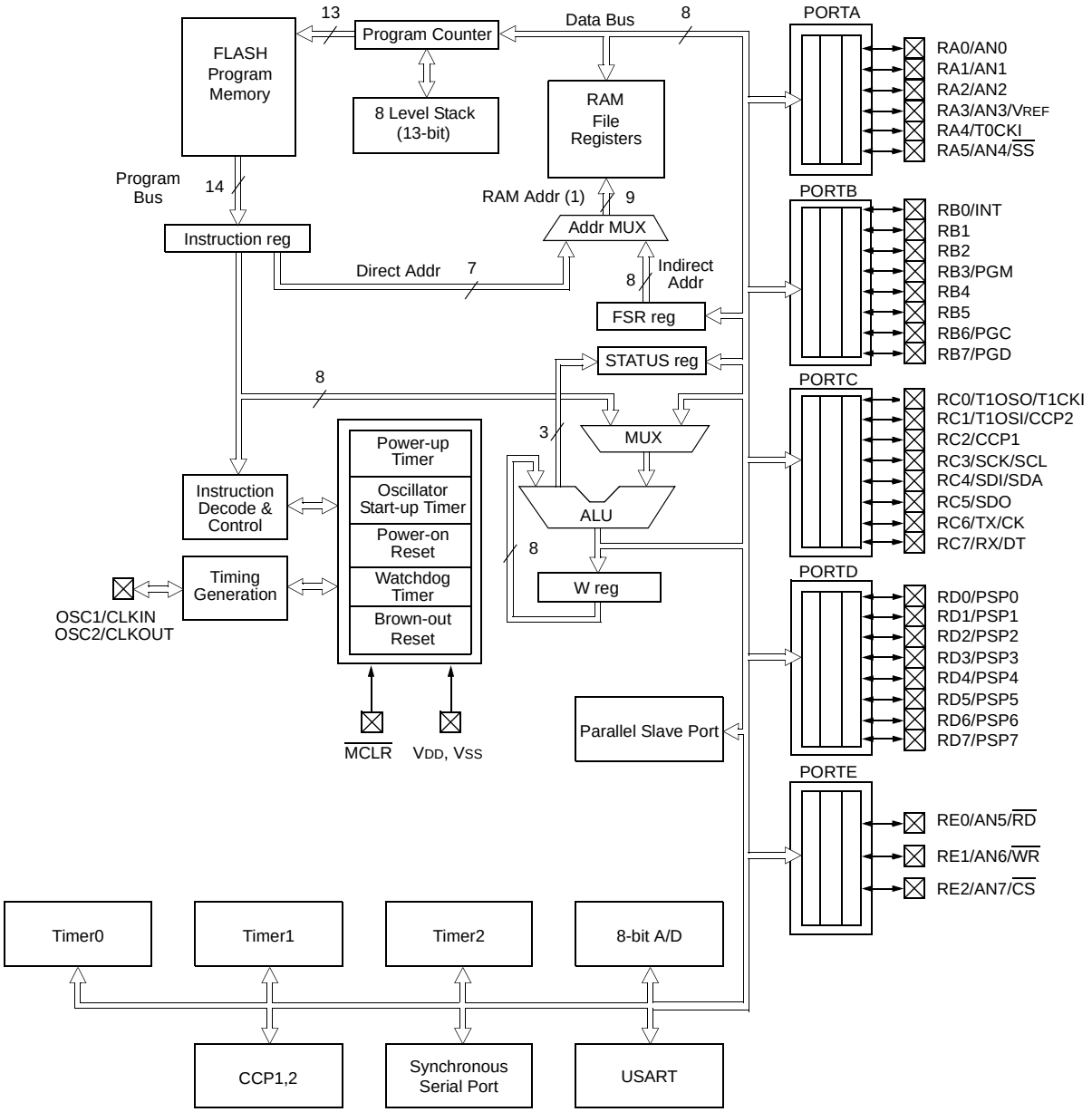

Note 1: Higher order bits are from the STATUS register.

 © 2000 Microchip Technology Inc.

TABLE 1-1: PIC16F73 AND PIC16F76 PINOUT DESCRIPTION

Pin Name	DIP Pin#	SSOP SOIC Pin#	I/O/P Type	Buffer Type	Description
OSC1/CLKIN	9	9	I	ST/CMOS(3)	Oscillator crystal input/external clock source input.
OSC2/CLKOUT	10	10	O	—	Oscillator crystal output. Connects to crystal or resonator in Crystal Oscillator mode. In RC mode, the OSC2 pin outputs CLKOUT which has 1/4 the frequency of OSC1, and denotes the instruction cycle rate.
$\overline{MCLR}$/VPP	1	1	I/P	ST	Master clear (RESET) input or programming voltage input or High Voltage Test mode control. This pin is an active low RESET to the device.
					PORTA is a bi-directional I/O port.
RA0/AN0	2	2	I/O	TTL	RA0 can also be analog input0.
RA1/AN1	3	3	I/O	TTL	RA1 can also be analog input1.
RA2/AN2	4	4	I/O	TTL	RA2 can also be analog input2.
RA3/AN3/VREF	5	5	I/O	TTL	RA3 can also be analog input3 or analog reference voltage.
RA4/T0CKI	6	6	I/O	ST	RA4 can also be the clock input to the Timer0 module. Output is open drain type.
RA5/$\overline{SS}$/AN4	7	7	I/O	TTL	RA5 can also be analog input4 or the slave select for the synchronous serial port.
					PORTB is a bi-directional I/O port. PORTB can be software programmed for internal weak pull-up on all inputs.
RB0/INT	21	21	I/O	TTL/ST(1)	RB0 can also be the external interrupt pin.
RB1	22	22	I/O	TTL	
RB2	23	23	I/O	TTL	
RB3	24	24	I/O	TTL	
RB4	25	25	I/O	TTL	Interrupt-on-change pin.
RB5	26	26	I/O	TTL	Interrupt-on-change pin.
RB6	27	27	I/O	TTL/ST(2)	Interrupt-on-change pin or Serial programming clock.
RB7	28	28	I/O	TTL/ST(2)	Interrupt-on-change pin or Serial programming data.
					PORTC is a bi-directional I/O port.
RC0/T1OSO/T1CKI	11	11	I/O	ST	RC0 can also be the Timer1 oscillator output or Timer1 clock input.
RC1/T1OSI/CCP2	12	12	I/O	ST	RC1 can also be the Timer1 oscillator input or Capture2 input/Compare2 output/PWM2 output.
RC2/CCP1	13	13	I/O	ST	RC2 can also be the Capture1 input/Compare1 output/PWM1 output.
RC3/SCK/SCL	14	14	I/O	ST	RC3 can also be the synchronous serial clock input/output for both SPI and I^2C modes.
RC4/SDI/SDA	15	15	I/O	ST	RC4 can also be the SPI Data In (SPI mode) or Data I/O (I^2C mode).
RC5/SDO	16	16	I/O	ST	RC5 can also be the SPI Data Out (SPI mode).
RC6/TX/CK	17	17	I/O	ST	RC6 can also be the USART Asynchronous Transmit or Synchronous Clock.
RC7/RX/DT	18	18	I/O	ST	RC7 can also be the USART Asynchronous Receive or Synchronous Data.
VSS	8, 19	8, 19	P	—	Ground reference for logic and I/O pins.
VDD	20	20	P	—	Positive supply for logic and I/O pins.

Legend: I = input O = output I/O = input/output P = power
— = Not used TTL = TTL input ST = Schmitt Trigger input

Note 1: This buffer is a Schmitt Trigger input when configured as the external interrupt.
2: This buffer is a Schmitt Trigger input when used in Serial Programming mode.
3: This buffer is a Schmitt Trigger input when configured in RC Oscillator mode and a CMOS input otherwise.

TABLE 1-2: PIC16F74 AND PIC16F77 PINOUT DESCRIPTION

Pin Name	DIP Pin#	PLCC Pin#	QFP Pin#	I/O/P Type	Buffer Type	Description
OSC1/CLKIN	13	14	30	I	ST/CMOS(4)	Oscillator crystal input/external clock source input.
OSC2/CLKOUT	14	15	31	O	—	Oscillator crystal output. Connects to crystal or resonator in Crystal Oscillator mode. In RC mode, OSC2 pin outputs CLKOUT which has 1/4 the frequency of OSC1, and denotes the instruction cycle rate.
$\overline{MCLR}$/VPP	1	2	18	I/P	ST	Master clear (RESET) input or programming voltage input or High Voltage Test mode control. This pin is an active low RESET to the device.
						PORTA is a bi-directional I/O port.
RA0/AN0	2	3	19	I/O	TTL	RA0 can also be analog input0.
RA1/AN1	3	4	20	I/O	TTL	RA1 can also be analog input1.
RA2/AN2	4	5	21	I/O	TTL	RA2 can also be analog input2.
RA3/AN3/VREF	5	6	22	I/O	TTL	RA3 can also be analog input3 or analog reference voltage.
RA4/T0CKI	6	7	23	I/O	ST	RA4 can also be the clock input to the Timer0 timer/ counter. Output is open drain type.
RA5/$\overline{SS}$/AN4	7	8	24	I/O	TTL	RA5 can also be analog input4 or the slave select for the synchronous serial port.
						PORTB is a bi-directional I/O port. PORTB can be software programmed for internal weak pull-up on all inputs.
RB0/INT	33	36	8	I/O	TTL/ST(1)	RB0 can also be the external interrupt pin.
RB1	34	37	9	I/O	TTL	
RB2	35	38	10	I/O	TTL	
RB3	36	39	11	I/O	TTL	
RB4	37	41	14	I/O	TTL	Interrupt-on-change pin.
RB5	38	42	15	I/O	TTL	Interrupt-on-change pin.
RB6	39	43	16	I/O	TTL/ST(2)	Interrupt-on-change pin or Serial programming clock.
RB7	40	44	17	I/O	TTL/ST(2)	Interrupt-on-change pin or Serial programming data.
						PORTC is a bi-directional I/O port.
RC0/T1OSO/T1CKI	15	16	32	I/O	ST	RC0 can also be the Timer1 oscillator output or a Timer1 clock input.
RC1/T1OSI/CCP2	16	18	35	I/O	ST	RC1 can also be the Timer1 oscillator input or Capture2 input/Compare2 output/PWM2 output.
RC2/CCP1	17	19	36	I/O	ST	RC2 can also be the Capture1 input/Compare1 output/ PWM1 output.
RC3/SCK/SCL	18	20	37	I/O	ST	RC3 can also be the synchronous serial clock input/output for both SPI and I^2C modes.
RC4/SDI/SDA	23	25	42	I/O	ST	RC4 can also be the SPI Data In (SPI mode) or Data I/O (I^2C mode).
RC5/SDO	24	26	43	I/O	ST	RC5 can also be the SPI Data Out (SPI mode).
RC6/TX/CK	25	27	44	I/O	ST	RC6 can also be the USART Asynchronous Transmit or Synchronous Clock.
RC7/RX/DT	26	29	1	I/O	ST	RC7 can also be the USART Asynchronous Receive or Synchronous Data.

Legend: I = input O = output I/O = input/output P = power
— = Not used TTL = TTL input ST = Schmitt Trigger input

Note 1: This buffer is a Schmitt Trigger input when configured as an external interrupt.
2: This buffer is a Schmitt Trigger input when used in Serial Programming mode.
3: This buffer is a Schmitt Trigger input when configured as general purpose I/O and a TTL input when used in the Parallel Slave Port mode (for interfacing to a microprocessor bus).
4: This buffer is a Schmitt Trigger input when configured in RC Oscillator mode and a CMOS input otherwise.

 © 2000 Microchip Technology Inc.

TABLE 1-2: PIC16F74 AND PIC16F77 PINOUT DESCRIPTION (CONTINUED)

Pin Name	DIP Pin#	PLCC Pin#	QFP Pin#	I/O/P Type	Buffer Type	Description
						PORTD is a bi-directional I/O port or parallel slave port when interfacing to a microprocessor bus.
RD0/PSP0	19	21	38	I/O	ST/TTL(3)	
RD1/PSP1	20	22	39	I/O	ST/TTL(3)	
RD2/PSP2	21	23	40	I/O	ST/TTL(3)	
RD3/PSP3	22	24	41	I/O	ST/TTL(3)	
RD4/PSP4	27	30	2	I/O	ST/TTL(3)	
RD5/PSP5	28	31	3	I/O	ST/TTL(3)	
RD6/PSP6	29	32	4	I/O	ST/TTL(3)	
RD7/PSP7	30	33	5	I/O	ST/TTL(3)	
						PORTE is a bi-directional I/O port.
RE0/$\overline{RD}$/AN5	8	9	25	I/O	ST/TTL(3)	RE0 can also be read control for the parallel slave port, or analog input5.
RE1/$\overline{WR}$/AN6	9	10	26	I/O	ST/TTL(3)	RE1 can also be write control for the parallel slave port, or analog input6.
RE2/$\overline{CS}$/AN7	10	11	27	I/O	ST/TTL(3)	RE2 can also be select control for the parallel slave port, or analog input7.
VSS	12,31	13,34	6,29	P	—	Ground reference for logic and I/O pins.
VDD	11,32	12,35	7,28	P	—	Positive supply for logic and I/O pins.
NC	—	1,17,28, 40	12,13, 33,34		—	These pins are not internally connected. These pins should be left unconnected.

Legend: I = input O = output I/O = input/output P = power
— = Not used TTL = TTL input ST = Schmitt Trigger input

Note 1: This buffer is a Schmitt Trigger input when configured as an external interrupt.
2: This buffer is a Schmitt Trigger input when used in Serial Programming mode.
3: This buffer is a Schmitt Trigger input when configured as general purpose I/O and a TTL input when used in the Parallel Slave Port mode (for interfacing to a microprocessor bus).
4: This buffer is a Schmitt Trigger input when configured in RC Oscillator mode and a CMOS input otherwise.

NOTES:

 © 2000 Microchip Technology Inc.

2.0 MEMORY ORGANIZATION

There are two memory blocks in each of these PICmicro® MCUs. The Program Memory and Data Memory have separate buses so that concurrent access can occur and is detailed in this section. The Program Memory can be read internally by user code (see Section 4.0).

Additional information on device memory may be found in the PICmicro™ Mid-Range Reference Manual, (DS33023).

2.1 Program Memory Organization

The PIC16F7X devices have a 13-bit program counter capable of addressing an 8K x 14 program memory space. The PIC16F77/76 devices have 8K x 14 words of FLASH program memory and the PIC16F73/74 devices have 4K x 14. Accessing a location above the physically implemented address will cause a wrap-around.

The RESET Vector is at 0000h and the Interrupt Vector is at 0004h.

FIGURE 2-1: PIC16F77/76 PROGRAM MEMORY MAP AND STACK

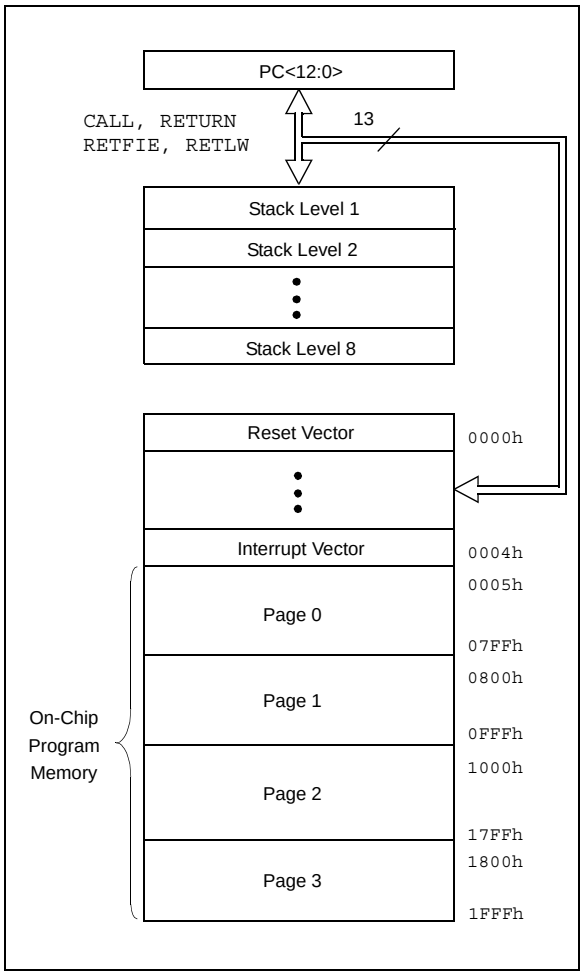

FIGURE 2-2: PIC16F74/73 PROGRAM MEMORY MAP AND STACK

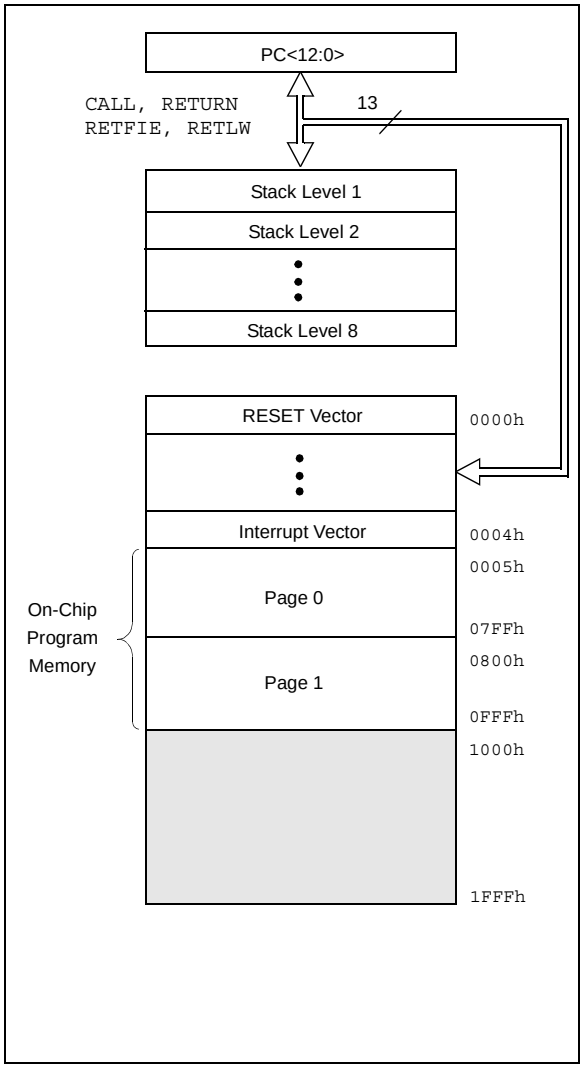

2.2 Data Memory Organization

The Data Memory is partitioned into multiple banks, which contain the General Purpose Registers and the Special Function Registers. Bits RP1 (STATUS<6>) and RP0 (STATUS<5>) are the bank select bits.

RP1:RP0	Bank
00	0
01	1
10	2
11	3

Each bank extends up to 7Fh (128 bytes). The lower locations of each bank are reserved for the Special Function Registers. Above the Special Function Registers are General Purpose Registers, implemented as static RAM. All implemented banks contain Special Function Registers. Some frequently used Special Function Registers from one bank may be mirrored in another bank for code reduction and quicker access.

2.2.1 GENERAL PURPOSE REGISTER FILE

The register file can be accessed either directly, or indirectly, through the File Select Register FSR.

 © 2000 Microchip Technology Inc.

FIGURE 2-3: PIC16F77/76 REGISTER FILE MAP

Bank 0	File Address	Bank 1	File Address	Bank 2	File Address	Bank 3	File Address
Indirect addr.(*)	00h	Indirect addr.(*)	80h	Indirect addr.(*)	100h	Indirect addr.(*)	180h
TMR0	01h	OPTION_REG	81h	TMR0	101h	OPTION_REG	181h
PCL	02h	PCL	82h	PCL	102h	PCL	182h
STATUS	03h	STATUS	83h	STATUS	103h	STATUS	183h
FSR	04h	FSR	84h	FSR	104h	FSR	184h
PORTA	05h	TRISA	85h		105h		185h
PORTB	06h	TRISB	86h	PORTB	106h	TRISB	186h
PORTC	07h	TRISC	87h		107h		187h
PORTD(1)	08h	TRISD(1)	88h		108h		188h
PORTE(1)	09h	TRISE(1)	89h		109h		189h
PCLATH	0Ah	PCLATH	8Ah	PCLATH	10Ah	PCLATH	18Ah
INTCON	0Bh	INTCON	8Bh	INTCON	10Bh	INTCON	18Bh
PIR1	0Ch	PIE1	8Ch	PMDATA	10Ch	PMCON1	18Ch
PIR2	0Dh	PIE2	8Dh	PMADR	10Dh		18Dh
TMR1L	0Eh	PCON	8Eh	PMDATH	10Eh		18Eh
TMR1H	0Fh		8Fh	PMADRH	10Fh		18Fh
T1CON	10h		90h	General Purpose Register 16 Bytes	110h	General Purpose Register 16 Bytes	190h
TMR2	11h		91h		111h		191h
T2CON	12h	PR2	92h		112h		192h
SSPBUF	13h	SSPADD	93h		113h		193h
SSPCON	14h	SSPSTAT	94h		114h		194h
CCPR1L	15h		95h		115h		195h
CCPR1H	16h		96h		116h		196h
CCP1CON	17h		97h		117h		197h
RCSTA	18h	TXSTA	98h		118h		198h
TXREG	19h	SPBRG	99h		119h		199h
RCREG	1Ah		9Ah		11Ah		19Ah
CCPR2L	1Bh		9Bh		11Bh		19Bh
CCPR2H	1Ch		9Ch		11Ch		19Ch
CCP2CON	1Dh		9Dh		11Dh		19Dh
ADRES	1Eh		9Eh		11Eh		19Eh
ADCON0	1Fh	ADCON1	9Fh		11Fh		19Fh
General Purpose Register 96 Bytes	20h	General Purpose Register 80 Bytes	A0h	General Purpose Register 80 Bytes	120h	General Purpose Register 80 Bytes	1A0h
			EFh		16Fh		1EFh
		accesses 70h-7Fh	F0h	accesses 70h-7Fh	170h	accesses 70h - 7Fh	1F0h
	7Fh		FFh		17Fh		1FFh

Unimplemented data memory locations, read as '0'.
* Not a physical register.

Note 1: These registers are not implemented on 28-pin devices.

FIGURE 2-4: PIC16F74/73 REGISTER FILE MAP

Bank 0	File Address	Bank 1	File Address	Bank 2	File Address	Bank 3	File Address
Indirect addr.(*)	00h	Indirect addr.(*)	80h	Indirect addr.(*)	100h	Indirect addr.(*)	180h
TMR0	01h	OPTION_REG	81h	TMR0	101h	OPTION_REG	181h
PCL	02h	PCL	82h	PCL	102h	PCL	182h
STATUS	03h	STATUS	83h	STATUS	103h	STATUS	183h
FSR	04h	FSR	84h	FSR	104h	FSR	184h
PORTA	05h	TRISA	85h		105h		185h
PORTB	06h	TRISB	86h	PORTB	106h	TRISB	186h
PORTC	07h	TRISC	87h		107h		187h
PORTD(1)	08h	TRISD(1)	88h		108h		188h
PORTE(1)	09h	TRISE(1)	89h		109h		189h
PCLATH	0Ah	PCLATH	8Ah	PCLATH	10Ah	PCLATH	18Ah
INTCON	0Bh	INTCON	8Bh	INTCON	10Bh	INTCON	18Bh
PIR1	0Ch	PIE1	8Ch	PMDATA	10Ch	PMCON1	18Ch
PIR2	0Dh	PIE2	8Dh	PMADR	10Dh		18Dh
TMR1L	0Eh	PCON	8Eh	PMDATH	10Eh		18Eh
TMR1H	0Fh		8Fh	PMADRH	10Fh		18Fh
T1CON	10h		90h		110h		190h
TMR2	11h		91h				
T2CON	12h	PR2	92h				
SSPBUF	13h	SSPADD	93h				
SSPCON	14h	SSPSTAT	94h				
CCPR1L	15h		95h				
CCPR1H	16h		96h				
CCP1CON	17h		97h				
RCSTA	18h	TXSTA	98h				
TXREG	19h	SPBRG	99h				
RCREG	1Ah		9Ah				
CCPR2L	1Bh		9Bh				
CCPR2H	1Ch		9Ch				
CCP2CON	1Dh		9Dh				
ADRES	1Eh		9Eh				
ADCON0	1Fh	ADCON1	9Fh				
	20h		A0h		120h		1A0h
General Purpose Register 96 Bytes		General Purpose Register 96 Bytes		accesses 20h-7Fh		accesses A0h - FFh	
					16Fh		1EFh
					170h		1F0h
	7Fh		FFh		17Fh		1FFh

Unimplemented data memory locations, read as '0'.

* Not a physical register.

Note 1: These registers are not implemented on 28-pin devices.

 © 2000 Microchip Technology Inc.

2.2.2 SPECIAL FUNCTION REGISTERS

The Special Function Registers are registers used by the CPU and peripheral modules for controlling the desired operation of the device. These registers are implemented as static RAM. A list of these registers is given in Table 2-1.

The Special Function Registers can be classified into two sets: core (CPU) and peripheral. Those registers associated with the core functions are described in detail in this section. Those related to the operation of the peripheral features are described in detail in the peripheral feature section.

TABLE 2-1: SPECIAL FUNCTION REGISTER SUMMARY

Address	Name	Bit 7	Bit 6	Bit 5	Bit 4	Bit 3	Bit 2	Bit 1	Bit 0	Value on: POR, BOR	Value on all other RESETS(2)
Bank 0											
00h(4)	INDF	Addressing this location uses contents of FSR to address data memory (not a physical register)								0000 0000	0000 0000
01h	TMR0	Timer0 Module's Register								xxxx xxxx	uuuu uuuu
02h(4)	PCL	Program Counter's (PC) Least Significant Byte								0000 0000	0000 0000
03h(4)	STATUS	IRP	RP1	RP0	$\overline{TO}$	$\overline{PD}$	Z	DC	C	0001 1xxx	000q quuu
04h(4)	FSR	Indirect data memory address pointer								xxxx xxxx	uuuu uuuu
05h	PORTA	—	—	PORTA Data Latch when written: PORTA pins when read						--0x 0000	--0u 0000
06h	PORTB	PORTB Data Latch when written: PORTB pins when read								xxxx xxxx	uuuu uuuu
07h	PORTC	PORTC Data Latch when written: PORTC pins when read								xxxx xxxx	uuuu uuuu
08h(5)	PORTD	PORTD Data Latch when written: PORTD pins when read								xxxx xxxx	uuuu uuuu
09h(5)	PORTE	—	—	—	—	—	RE2	RE1	RE0	---- -xxx	---- -uuu
0Ah(1,4)	PCLATH	—	—	—	Write Buffer for the upper 5 bits of the Program Counter					---0 0000	---0 0000
0Bh(4)	INTCON	GIE	PEIE	T0IE	INTE	RBIE	T0IF	INTF	RBIF	0000 000x	0000 000u
0Ch	PIR1	PSPIF(3)	ADIF	RCIF	TXIF	SSPIF	CCP1IF	TMR2IF	TMR1IF	0000 0000	0000 0000
0Dh	PIR2	—	—	—	—	—	—	—	CCP2IF	---- ---0	---- ---0
0Eh	TMR1L	Holding register for the Least Significant Byte of the 16-bit TMR1 Register								xxxx xxxx	uuuu uuuu
0Fh	TMR1H	Holding register for the Most Significant Byte of the 16-bit TMR1 Register								xxxx xxxx	uuuu uuuu
10h	T1CON	—	—	T1CKPS1	T1CKPS0	T1OSCEN	T1SYNC	TMR1CS	TMR1ON	--00 0000	--uu uuuu
11h	TMR2	Timer2 Module's Register								0000 0000	0000 0000
12h	T2CON	—	TOUTPS3	TOUTPS2	TOUTPS	TOUTPS0	TMR2ON	T2CKPS1	T2CKPS0	-000 0000	-000 0000
13h	SSPBUF	Synchronous Serial Port Receive Buffer/Transmit Register								xxxx xxxx	uuuu uuuu
14h	SSPCON	WCOL	SSPOV	SSPEN	CKP	SSPM3	SSPM2	SSPM1	SSPM0	0000 0000	0000 0000
15h	CCPR1L	Capture/Compare/PWM Register1 (LSB)								xxxx xxxx	uuuu uuuu
16h	CCPR1H	Capture/Compare/PWM Register1 (MSB)								xxxx xxxx	uuuu uuuu
17h	CCP1CON	—	—	CCP1X	CCP1Y	CCP1M3	CCP1M2	CCP1M1	CCP1M0	--00 0000	--00 0000
18h	RCSTA	SPEN	RX9	SREN	CREN	—	FERR	OERR	RX9D	0000 -00x	0000 -00x
19h	TXREG	USART Transmit Data Register								0000 0000	0000 0000
1Ah	RCREG	USART Receive Data Register								0000 0000	0000 0000
1Bh	CCPR2L	Capture/Compare/PWM Register2 (LSB)								xxxx xxxx	uuuu uuuu
1Ch	CCPR2H	Capture/Compare/PWM Register2 (MSB)								xxxx xxxx	uuuu uuuu
1Dh	CCP2CON	—	—	CCP2X	CCP2Y	CCP2M3	CCP2M2	CCP2M1	CCP2M0	--00 0000	--00 0000
1Eh	ADRES	A/D Result Register Byte								xxxx xxxx	uuuu uuuu
1Fh	ADCON0	ADCS1	ADCS0	CHS2	CHS1	CHS0	GO/$\overline{DONE}$	—	ADON	0000 00-0	0000 00-0

Legend: x = unknown, u = unchanged, q = value depends on condition, - = unimplemented read as '0', r = reserved. Shaded locations are unimplemented, read as '0'.

Note 1: The upper byte of the program counter is not directly accessible. PCLATH is a holding register for the PC<12:8>, whose contents are transferred to the upper byte of the program counter.

2: Other (non power-up) RESETS include external RESET through $\overline{MCLR}$ and Watchdog Timer Reset.

3: Bits PSPIE and PSPIF are reserved on the 28-pin devices; always maintain these bits clear.

4: These registers can be addressed from any bank.

5: PORTD, PORTE, TRISD, and TRISE are not physically implemented on the 28-pin devices, read as '0'.

6: This bit always reads as a '1'.

TABLE 2-1: SPECIAL FUNCTION REGISTER SUMMARY (CONTINUED)

Address	Name	Bit 7	Bit 6	Bit 5	Bit 4	Bit 3	Bit 2	Bit 1	Bit 0	Value on: POR, BOR	Value on all other RESETS(2)
Bank 1											
80h(4)	INDF	Addressing this location uses contents of FSR to address data memory (not a physical register)								0000 0000	0000 0000
81h	OPTION_REG	$\overline{\text{RBPU}}$	INTEDG	T0CS	T0SE	PSA	PS2	PS1	PS0	1111 1111	1111 1111
82h(4)	PCL	Program Counter's (PC) Least Significant Byte								0000 0000	0000 0000
83h(4)	STATUS	IRP	RP1	RP0	$\overline{\text{TO}}$	$\overline{\text{PD}}$	Z	DC	C	0001 1xxx	000q quuu
84h(4)	FSR	Indirect data memory address pointer								xxxx xxxx	uuuu uuuu
85h	TRISA	—	—	PORTA Data Direction Register						--11 1111	--11 1111
86h	TRISB	PORTB Data Direction Register								1111 1111	1111 1111
87h	TRISC	PORTC Data Direction Register								1111 1111	1111 1111
88h(5)	TRISD	PORTD Data Direction Register								1111 1111	1111 1111
89h(5)	TRISE	IBF	OBF	IBOV	PSPMODE	—	PORTE Data Direction Bits			0000 -111	0000 -111
8Ah(1,4)	PCLATH	—	—	—	Write Buffer for the upper 5 bits of the Program Counter					---0 0000	---0 0000
8Bh(4)	INTCON	GIE	PEIE	T0IE	INTE	RBIE	T0IF	INTF	RBIF	0000 000x	0000 000u
8Ch	PIE1	PSPIE(3)	ADIE	RCIE	TXIE	SSPIE	CCP1IE	TMR2IE	TMR1IE	0000 0000	0000 0000
8Dh	PIE2	—	—	—	—	—	—	—	CCP2IE	---- ---0	---- ---0
8Eh	PCON	—	—	—	—	—	—	$\overline{\text{POR}}$	BOR	---- --qq	---- --uu
8Fh	—	Unimplemented								—	—
90h	—	Unimplemented								—	—
91h	—	Unimplemented								—	—
92h	PR2	Timer2 Period Register								1111 1111	1111 1111
93h	SSPADD	Synchronous Serial Port (I^2C mode) Address Register								0000 0000	0000 0000
94h	SSPSTAT	SMP	CKE	D/$\overline{\text{A}}$	P	S	R/$\overline{\text{W}}$	UA	BF	0000 0000	0000 0000
95h	—	Unimplemented								—	—
96h	—	Unimplemented								—	—
97h	—	Unimplemented								—	—
98h	TXSTA	CSRC	TX9	TXEN	SYNC	—	BRGH	TRMT	TX9D	0000 -010	0000 -010
99h	SPBRG	Baud Rate Generator Register								0000 0000	0000 0000
9Ah	—	Unimplemented								—	—
9Bh	—	Unimplemented								—	—
9Ch	—	Unimplemented								—	—
9Dh	—	Unimplemented								—	—
9Eh	—	Unimplemented								—	—
9Fh	ADCON1	—	—	—	—	—	PCFG2	PCFG1	PCFG0	---- -000	---- -000

Legend: x = unknown, u = unchanged, q = value depends on condition, - = unimplemented read as '0', r = reserved. Shaded locations are unimplemented, read as '0'.

Note 1: The upper byte of the program counter is not directly accessible. PCLATH is a holding register for the PC<12:8>, whose contents are transferred to the upper byte of the program counter.

2: Other (non power-up) RESETS include external RESET through $\overline{\text{MCLR}}$ and Watchdog Timer Reset.

3: Bits PSPIE and PSPIF are reserved on the 28-pin devices; always maintain these bits clear.

4: These registers can be addressed from any bank.

5: PORTD, PORTE, TRISD, and TRISE are not physically implemented on the 28-pin devices, read as '0'.

6: This bit always reads as a '1'.

 © 2000 Microchip Technology Inc.

TABLE 2-1: SPECIAL FUNCTION REGISTER SUMMARY (CONTINUED)

Address	Name	Bit 7	Bit 6	Bit 5	Bit 4	Bit 3	Bit 2	Bit 1	Bit 0	Value on: POR, BOR	Value on all other RESETS(2)
Bank 2											
100h(4)	INDF	Addressing this location uses contents of FSR to address data memory (not a physical register)								0000 0000	0000 0000
101h	TMR0	Timer0 Module's Register								xxxx xxxx	uuuu uuuu
102h(4)	PCL	Program Counter's (PC) Least Significant Byte								0000 0000	0000 0000
103h(4)	STATUS	IRP	RP1	RP0	TO	PD	Z	DC	C	0001 1xxx	000q quuu
104h(4)	FSR	Indirect Data Memory Address Pointer								xxxx xxxx	uuuu uuuu
105h	—	Unimplemented								—	—
106h	PORTB	PORTB Data Latch when written: PORTB pins when read								xxxx xxxx	uuuu uuuu
107h	—	Unimplemented								—	—
108h	—	Unimplemented								—	—
109h	—	Unimplemented								—	—
10Ah(1,4)	PCLATH	—	—	—	Write Buffer for the upper 5 bits of the Program Counter					---0 0000	---0 0000
10Bh(4)	INTCON	GIE	PEIE	T0IE	INTE	RBIE	T0IF	INTF	RBIF	0000 000x	0000 000u
10Ch	PMDATA	Data Register Low Byte								xxxx xxxx	uuuu uuuu
10Dh	PMADR	Address Register Low Byte								xxxx xxxx	uuuu uuuu
10Eh	PMDATH	—	—	Data Register High Byte						xxxx xxxx	uuuu uuuu
10Fh	PMADRH	—	—	—	Address Register High Byte					xxxx xxxx	uuuu uuuu
Bank 3											
180h(4)	INDF	Addressing this location uses contents of FSR to address data memory (not a physical register)								0000 0000	0000 0000
181h	OPTION_REG	$\overline{\text{RBPU}}$	INTEDG	T0CS	T0SE	PSA	PS2	PS1	PS0	1111 1111	1111 1111
182h(4)	PCL	Program Counter's (PC) Least Significant Byte								0000 0000	0000 0000
183h(4)	STATUS	IRP	RP1	RP0	TO	PD	Z	DC	C	0001 1xxx	000q quuu
184h(4)	FSR	Indirect Data Memory Address Pointer								xxxx xxxx	uuuu uuuu
185h	—	Unimplemented								—	—
186h	TRISB	PORTB Data Direction Register								1111 1111	1111 1111
187h	—	Unimplemented								—	—
188h	—	Unimplemented								—	—
189h	—	Unimplemented								—	—
18Ah(1,4)	PCLATH	—	—	—	Write Buffer for the upper 5 bits of the Program Counter					---0 0000	---0 0000
18Bh(4)	INTCON	GIE	PEIE	T0IE	INTE	RBIE	T0IF	INTF	RBIF	0000 000x	0000 000u
18Ch	PMCON1	— (6)	—	—	—	—	—	—	RD	1--- ---0	1--- ---0
18Dh	—	Unimplemented								—	—
18Eh	—	Reserved maintain clear								0000 0000	0000 0000
18Fh	—	Reserved maintain clear								0000 0000	0000 0000

Legend: x = unknown, u = unchanged, q = value depends on condition, - = unimplemented read as '0', r = reserved. Shaded locations are unimplemented, read as '0'.

Note 1: The upper byte of the program counter is not directly accessible. PCLATH is a holding register for the PC<12:8>, whose contents are transferred to the upper byte of the program counter.

2: Other (non power-up) RESETS include external RESET through $\overline{\text{MCLR}}$ and Watchdog Timer Reset.

3: Bits PSPIE and PSPIF are reserved on the 28-pin devices; always maintain these bits clear.

4: These registers can be addressed from any bank.

5: PORTD, PORTE, TRISD, and TRISE are not physically implemented on the 28-pin devices, read as '0'.

6: This bit always reads as a '1'.

2.2.2.1 STATUS Register

The STATUS register contains the arithmetic status of the ALU, the RESET status and the bank select bits for data memory.

The STATUS register can be the destination for any instruction, as with any other register. If the STATUS register is the destination for an instruction that affects the Z, DC, or C bits, then the write to these three bits is disabled. These bits are set or cleared according to the device logic. Furthermore, the $\overline{TO}$ and $\overline{PD}$ bits are not writable, therefore, the result of an instruction with the STATUS register as destination may be different than intended.

For example, `CLRF STATUS` will clear the upper-three bits and set the Z bit. This leaves the STATUS register as `000u u1uu` (where `u` = unchanged).

It is recommended, therefore, that only `BCF, BSF, SWAPF` and `MOVWF` instructions are used to alter the STATUS register, because these instructions do not affect the Z, C, or DC bits from the STATUS register. For other instructions not affecting any status bits, see the "Instruction Set Summary."

> **Note 1:** The C and DC bits operate as a $\overline{\text{borrow}}$ and $\overline{\text{digit borrow}}$ bit, respectively, in subtraction. See the `SUBLW` and `SUBWF` instructions for examples.

REGISTER 2-1: STATUS REGISTER (ADDRESS 03h, 83h, 103h, 183h)

R/W-0	R/W-0	R/W-0	R-1	R-1	R/W-x	R/W-x	R/W-x
IRP	RP1	RP0	$\overline{TO}$	$\overline{PD}$	Z	DC	C
bit 7							bit 0

bit 7 **IRP:** Register Bank Select bit (used for indirect addressing)
`1` = Bank 2, 3 (100h - 1FFh)
`0` = Bank 0, 1 (00h - FFh)

bit 6-5 **RP1:RP0**: Register Bank Select bits (used for direct addressing)
`11` = Bank 3 (180h - 1FFh)
`10` = Bank 2 (100h - 17Fh)
`01` = Bank 1 (80h - FFh)
`00` = Bank 0 (00h - 7Fh)
Each bank is 128 bytes

bit 4 **$\overline{TO}$**: Time-out bit
`1` = After power-up, `CLRWDT` instruction, or `SLEEP` instruction
`0` = A WDT time-out occurred

bit 3 **$\overline{PD}$**: Power-down bit
`1` = After power-up or by the `CLRWDT` instruction
`0` = By execution of the `SLEEP` instruction

bit 2 **z**: Zero bit
`1` = The result of an arithmetic or logic operation is zero
`0` = The result of an arithmetic or logic operation is not zero

bit 1 **DC**: Digit carry/$\overline{\text{borrow}}$ bit (`ADDWF`, `ADDLW, SUBLW, SUBWF` instructions)
(for $\overline{\text{borrow}}$ the polarity is reversed)
`1` = A carry-out from the 4th low order bit of the result occurred
`0` = No carry-out from the 4th low order bit of the result

bit 0 **C:** Carry/$\overline{\text{borrow}}$ bit (`ADDWF, ADDLW, SUBLW, SUBWF` instructions)
`1` = A carry-out from the most significant bit of the result occurred
`0` = No carry-out from the most significant bit of the result occurred

> **Note:** For $\overline{\text{borrow}}$, the polarity is reversed. A subtraction is executed by adding the two's complement of the second operand. For rotate (`RRF, RLF`) instructions, this bit is loaded with either the high or low order bit of the source register.

Legend:			
R = Readable bit	W = Writable bit	U = Unimplemented bit, read as '0'	
- n = Value at POR reset	'1' = Bit is set	'0' = Bit is cleared	x = Bit is unknown

 © 2000 Microchip Technology Inc.

2.2.2.2 OPTION_REG Register

The OPTION_REG register is a readable and writable register, which contains various control bits to configure the TMR0 prescaler/WDT postscaler (single assignable register known also as the prescaler), the External INT Interrupt, TMR0 and the weak pull-ups on PORTB.

> **Note:** To achieve a 1:1 prescaler assignment for the TMR0 register, assign the prescaler to the Watchdog Timer.

REGISTER 2-2: OPTION_REG REGISTER (ADDRESS 81h, 181h)

R/W-1	R/W-1	R/W-1	R/W-1	R/W-1	R/W-1	R/W-1	R/W-1
$\overline{\text{RBPU}}$	INTEDG	T0CS	T0SE	PSA	PS2	PS1	PS0
bit 7							bit 0

bit 7 **$\overline{\text{RBPU}}$**: PORTB Pull-up Enable bit
1 = PORTB pull-ups are disabled
0 = PORTB pull-ups are enabled by individual port latch values

bit 6 **INTEDG**: Interrupt Edge Select bit
1 = Interrupt on rising edge of RB0/INT pin
0 = Interrupt on falling edge of RB0/INT pin

bit 5 **T0CS**: TMR0 Clock Source Select bit
1 = Transition on RA4/T0CKI pin
0 = Internal instruction cycle clock (CLKOUT)

bit 4 **T0SE**: TMR0 Source Edge Select bit
1 = Increment on high-to-low transition on RA4/T0CKI pin
0 = Increment on low-to-high transition on RA4/T0CKI pin

bit 3 **PSA**: Prescaler Assignment bit
1 = Prescaler is assigned to the WDT
0 = Prescaler is assigned to the Timer0 module

bit 2-0 **PS2:PS0**: Prescaler Rate Select bits

Bit Value	TMR0 Rate	WDT Rate
000	1 : 2	1 : 1
001	1 : 4	1 : 2
010	1 : 8	1 : 4
011	1 : 16	1 : 8
100	1 : 32	1 : 16
101	1 : 64	1 : 32
110	1 : 128	1 : 64
111	1 : 256	1 : 128

Legend:			
R = Readable bit	W = Writable bit	U = Unimplemented bit, read as ‘0’	
- n = Value at POR reset	’1’ = Bit is set	’0’ = Bit is cleared	x = Bit is unknown

2.2.2.3 INTCON Register

The INTCON register is a readable and writable register, which contains various enable and flag bits for the TMR0 register overflow, RB Port change and External RB0/INT pin interrupts.

> **Note:** Interrupt flag bits are set when an interrupt condition occurs, regardless of the state of its corresponding enable bit or the global enable bit, GIE (INTCON<7>). User software should ensure the appropriate interrupt flag bits are clear prior to enabling an interrupt.

REGISTER 2-3: INTCON REGISTER (ADDRESS 0Bh, 8Bh, 10Bh, 18Bh)

R/W-0	R/W-0	R/W-0	R/W-0	R/W-0	R/W-0	R/W-0	R/W-x
GIE	PEIE	T0IE	INTE	RBIE	T0IF	INTF	RBIF
bit 7							bit 0

bit 7 **GIE:** Global Interrupt Enable bit
1 = Enables all un-masked interrupts
0 = Disables all interrupts

bit 6 **PEIE**: Peripheral Interrupt Enable bit
1 = Enables all un-masked peripheral interrupts
0 = Disables all peripheral interrupts

bit 5 **T0IE**: TMR0 Overflow Interrupt Enable bit
1 = Enables the TMR0 interrupt
0 = Disables the TMR0 interrupt

bit 4 **INTE**: RB0/INT External Interrupt Enable bit
1 = Enables the RB0/INT external interrupt
0 = Disables the RB0/INT external interrupt

bit 3 **RBIE**: RB Port Change Interrupt Enable bit
1 = Enables the RB port change interrupt
0 = Disables the RB port change interrupt

bit 2 **T0IF**: TMR0 Overflow Interrupt Flag bit
1 = TMR0 register has overflowed (must be cleared in software)
0 = TMR0 register did not overflow

bit 1 **INTF**: RB0/INT External Interrupt Flag bit
1 = The RB0/INT external interrupt occurred (must be cleared in software)
0 = The RB0/INT external interrupt did not occur

bit 0 **RBIF**: RB Port Change Interrupt Flag bit
A mismatch condition will continue to set flag bit RBIF. Reading PORTB will end the mismatch condition and allow flag bit RBIF to be cleared.
1 = At least one of the RB7:RB4 pins changed state (must be cleared in software)
0 = None of the RB7:RB4 pins have changed state

Legend:			
R = Readable bit	W = Writable bit	U = Unimplemented bit, read as ‘0’	
- n = Value at POR reset	’1’ = Bit is set	’0’ = Bit is cleared	x = Bit is unknown

 © 2000 Microchip Technology Inc.

2.2.2.4 PIE1 Register

The PIE1 register contains the individual enable bits for the peripheral interrupts.

> **Note:** Bit PEIE (INTCON<6>) must be set to enable any peripheral interrupt.

REGISTER 2-4: PIE1 REGISTER (ADDRESS 8Ch)

R/W-0	R/W-0	R/W-0	R/W-0	R/W-0	R/W-0	R/W-0	R/W-0
PSPIE(1)	ADIE	RCIE	TXIE	SSPIE	CCP1IE	TMR2IE	TMR1IE
bit 7							bit 0

bit 7 **PSPIE(1):** Parallel Slave Port Read/Write Interrupt Enable bit
1 = Enables the PSP read/write interrupt
0 = Disables the PSP read/write interrupt

bit 6 **ADIE**: A/D Converter Interrupt Enable bit
1 = Enables the A/D converter interrupt
0 = Disables the A/D converter interrupt

bit 5 **RCIE**: USART Receive Interrupt Enable bit
1 = Enables the USART receive interrupt
0 = Disables the USART receive interrupt

bit 4 **TXIE**: USART Transmit Interrupt Enable bit
1 = Enables the USART transmit interrupt
0 = Disables the USART transmit interrupt

bit 3 **SSPIE**: Synchronous Serial Port Interrupt Enable bit
1 = Enables the SSP interrupt
0 = Disables the SSP interrupt

bit 2 **CCP1IE**: CCP1 Interrupt Enable bit
1 = Enables the CCP1 interrupt
0 = Disables the CCP1 interrupt

bit 1 **TMR2IE**: TMR2 to PR2 Match Interrupt Enable bit
1 = Enables the TMR2 to PR2 match interrupt
0 = Disables the TMR2 to PR2 match interrupt

bit 0 **TMR1IE**: TMR1 Overflow Interrupt Enable bit
1 = Enables the TMR1 overflow interrupt
0 = Disables the TMR1 overflow interrupt

Note 1: PSPIE is reserved on 28-pin devices; always maintain this bit clear.

Legend:			
R = Readable bit	W = Writable bit	U = Unimplemented bit, read as ‘0’	
- n = Value at POR reset	’1’ = Bit is set	’0’ = Bit is cleared	x = Bit is unknown

2.2.2.5 PIR1 Register

The PIR1 register contains the individual flag bits for the peripheral interrupts.

> **Note:** Interrupt flag bits are set when an interrupt condition occurs, regardless of the state of its corresponding enable bit or the global enable bit, GIE (INTCON<7>). User software should ensure the appropriate interrupt bits are clear prior to enabling an interrupt.

REGISTER 2-5: PIR1 REGISTER (ADDRESS 0Ch)

R/W-0	R/W-0	R-0	R-0	R/W-0	R/W-0	R/W-0	R/W-0
PSPIF(1)	ADIF	RCIF	TXIF	SSPIF	CCP1IF	TMR2IF	TMR1IF
bit 7							bit 0

bit 7 **PSPIF(1):** Parallel Slave Port Read/Write Interrupt Flag bit
1 = A read or a write operation has taken place (must be cleared in software)
0 = No read or write has occurred

bit 6 **ADIF**: A/D Converter Interrupt Flag bit
1 = An A/D conversion completed
0 = The A/D conversion is not complete

bit 5 **RCIF**: USART Receive Interrupt Flag bit
1 = The USART receive buffer is full
0 = The USART receive buffer is empty

bit 4 **TXIF**: USART Transmit Interrupt Flag bit
1 = The USART transmit buffer is empty
0 = The USART transmit buffer is full

bit 3 **SSPIF**: Synchronous Serial Port (SSP) Interrupt Flag
1 = The SSP interrupt condition has occurred, and must be cleared in software before returning from the Interrupt Service Routine. The conditions that will set this bit are:
SPI
A transmission/reception has taken place.
I^2C Slave
A transmission/reception has taken place.
I^2C Master
A transmission/reception has taken place.
The initiated START condition was completed by the SSP module.
The initiated STOP condition was completed by the SSP module.
The initiated Restart condition was completed by the SSP module.
The initiated Acknowledge condition was completed by the SSP module.
A START condition occurred while the SSP module was idle (Multi-master system).
A STOP condition occurred while the SSP module was idle (Multi-master system).
0 = No SSP interrupt condition has occurred.

bit 2 **CCP1IF**: CCP1 Interrupt Flag bit
Capture Mode
1 = A TMR1 register capture occurred (must be cleared in software)
0 = No TMR1 register capture occurred
Compare Mode
1 = A TMR1 register compare match occurred (must be cleared in software)
0 = No TMR1 register compare match occurred
PWM Mode
Unused in this mode

bit 1 **TMR2IF**: TMR2 to PR2 Match Interrupt Flag bit
1 = TMR2 to PR2 match occurred (must be cleared in software)
0 = No TMR2 to PR2 match occurred

bit 0 **TMR1IF**: TMR1 Overflow Interrupt Flag bit
1 = TMR1 register overflowed (must be cleared in software)
0 = TMR1 register did not overflow

Note 1: PSPIF is reserved on 28-pin devices; always maintain this bit clear.

Legend:			
R = Readable bit	W = Writable bit	U = Unimplemented bit, read as ‘0’	
- n = Value at POR reset	’1’ = Bit is set	’0’ = Bit is cleared	x = Bit is unknown

 © 2000 Microchip Technology Inc.

2.2.2.6 PIE2 Register

The PIE2 register contains the individual enable bits for the CCP2 peripheral interrupt.

REGISTER 2-6: PIE2 REGISTER (ADDRESS 8Dh)

U-0	U-0	U-0	U-0	U-0	U-0	U-0	R/W-0
—	—	—	—	—	—	—	CCP2IE
bit 7							bit 0

bit 7-1 **Unimplemented:** Read as ’0’

bit 0 **CCP2IE**: CCP2 Interrupt Enable bit
`1` = Enables the CCP2 interrupt
`0` = Disables the CCP2 interrupt

Legend:			
R = Readable bit	W = Writable bit	U = Unimplemented bit, read as ‘0’	
- n = Value at POR reset	’1’ = Bit is set	’0’ = Bit is cleared	x = Bit is unknown

2.2.2.7 PIR2 Register

The PIR2 register contains the flag bits for the CCP2 interrupt.

.

Note:	Interrupt flag bits are set when an interrupt condition occurs, regardless of the state of its corresponding enable bit or the global enable bit, GIE (INTCON<7>). User software should ensure the appropriate interrupt flag bits are clear prior to enabling an interrupt.

REGISTER 2-7: PIR2 REGISTER (ADDRESS 0Dh)

U-0	U-0	U-0	U-0	U-0	U-0	U-0	R/W-0
—	—	—	—	—	—	—	CCP2IF
bit 7							bit 0

bit 7-1 **Unimplemented:** Read as '0'

bit 0 **CCP2IF**: CCP2 Interrupt Flag bit

Capture Mode
`1` = A TMR1 register capture occurred (must be cleared in software)
`0` = No TMR1 register capture occurred

Compare Mode
`1` = A TMR1 register compare match occurred (must be cleared in software)
`0` = No TMR1 register compare match occurred

PWM Mode
Unused

Legend:			
R = Readable bit	W = Writable bit	U = Unimplemented bit, read as ‘0’	
- n = Value at POR reset	’1’ = Bit is set	’0’ = Bit is cleared	x = Bit is unknown

 © 2000 Microchip Technology Inc.

2.2.2.8 PCON Register

The Power Control (PCON) register contains flag bits to allow differentiation between a Power-on Reset (POR), a Brown-out Reset (BOR), a Watchdog Reset (WDT) and an external $\overline{MCLR}$ Reset.

Note:	$\overline{BOR}$ is unknown on POR. It must be set by the user and checked on subsequent RESETS to see if BOR is clear, indicating a brown-out has occurred. The BOR status bit is a don't care and is not predictable if the brown-out circuit is disabled (by clearing the BODEN bit in the configuration word).

REGISTER 2-8: PCON REGISTER (ADDRESS 8Eh)

U-0	U-0	U-0	U-0	U-0	U-0	R/W-0	R/W-1
—	—	—	—	—	—	$\overline{POR}$	$\overline{BOR}$
bit 7							bit 0

bit 7-2 **Unimplemented:** Read as '0'

bit 1 **$\overline{POR}$**: Power-on Reset Status bit
1 = No Power-on Reset occurred
0 = A Power-on Reset occurred (must be set in software after a Power-on Reset occurs)

bit 0 **$\overline{BOR}$**: Brown-out Reset Status bit
1 = No Brown-out Reset occurred
0 = A Brown-out Reset occurred (must be set in software after a Brown-out Reset occurs)

Legend:			
R = Readable bit	W = Writable bit	U = Unimplemented bit, read as '0'	
- n = Value at POR reset	'1' = Bit is set	'0' = Bit is cleared	x = Bit is unknown

2.3 PCL and PCLATH

The program counter (PC) is 13-bits wide. The low byte comes from the PCL register, which is a readable and writable register. The upper bits (PC<12:8>) are not readable, but are indirectly writable through the PCLATH register. On any RESET, the upper bits of the PC will be cleared. Figure 2-5 shows the two situations for the loading of the PC. The upper example in the figure shows how the PC is loaded on a write to PCL (PCLATH<4:0> → PCH). The lower example in the figure shows how the PC is loaded during a CALL or GOTO instruction (PCLATH<4:3> → PCH).

FIGURE 2-5: LOADING OF PC IN DIFFERENT SITUATIONS

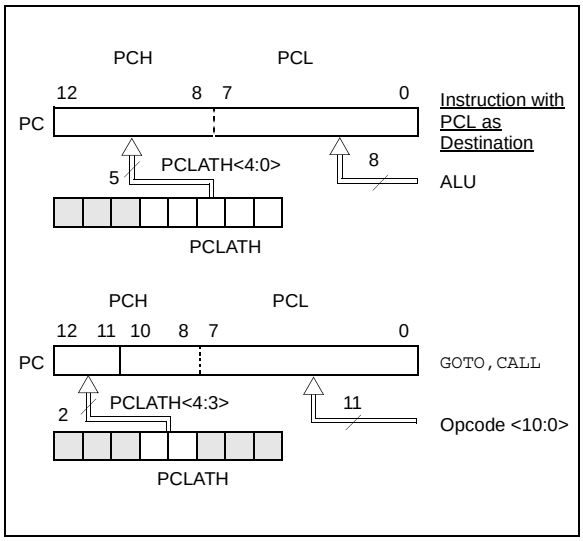

2.3.1 COMPUTED GOTO

A computed GOTO is accomplished by adding an offset to the program counter (ADDWF PCL). When doing a table read using a computed GOTO method, care should be exercised if the table location crosses a PCL memory boundary (each 256 byte block). Refer to the application note, *"Implementing a Table Read"* (AN556).

2.3.2 STACK

The PIC16F7X family has an 8-level deep x 13-bit wide hardware stack. The stack space is not part of either program or data space and the stack pointer is not readable or writable. The PC is PUSHed onto the stack when a CALL instruction is executed, or an interrupt causes a branch. The stack is POPed in the event of a RETURN,RETLW or a RETFIE instruction execution. PCLATH is not affected by a PUSH or POP operation.

The stack operates as a circular buffer. This means that after the stack has been PUSHed eight times, the ninth push overwrites the value that was stored from the first push. The tenth push overwrites the second push (and so on).

> **Note 1:** There are no status bits to indicate stack overflow or stack underflow conditions.
>
> **2:** There are no instructions/mnemonics called PUSH or POP. These are actions that occur from the execution of the CALL, RETURN, RETLW and RETFIE instructions or the vectoring to an interrupt address.

2.4 Program Memory Paging

PIC16F7X devices are capable of addressing a continuous 8K word block of program memory. The CALL and GOTO instructions provide only 11 bits of address to allow branching within any 2K program memory page. When doing a CALL or GOTO instruction, the upper 2 bits of the address are provided by PCLATH<4:3>. When doing a CALL or GOTO instruction, the user must ensure that the page select bits are programmed so that the desired program memory page is addressed. If a return from a CALL instruction (or interrupt) is executed, the entire 13-bit PC is popped off the stack. Therefore, manipulation of the PCLATH<4:3> bits are not required for the return instructions (which POPs the address from the stack).

> **Note:** The contents of the PCLATH are unchanged after a RETURN or RETFIE instruction is executed. The user must setup the PCLATH for any subsequent CALLS or GOTOS.

Example 2-1 shows the calling of a subroutine in page 1 of the program memory. This example assumes that PCLATH is saved and restored by the Interrupt Service Routine (if interrupts are used).

EXAMPLE 2-1: CALL OF A SUBROUTINE IN PAGE 1 FROM PAGE 0

```
    ORG  0x500
    BCF  PCLATH,4
    BSF  PCLATH,3    ;Select page 1 (800h-FFFh)
    CALL SUB1_P1     ;Call subroutine in
    :                ;page 1 (800h-FFFh)
    :
    ORG  0x900       ;page 1 (800h-FFFh)
SUB1_P1
    :                ;called subroutine
    :                ;page 1 (800h-FFFh)
    :
    RETURN           ;return to Call subroutine
                     ;in page 0 (000h-7FFh)
```

 © 2000 Microchip Technology Inc.

2.5 Indirect Addressing, INDF and FSR Registers

The INDF register is not a physical register. Addressing the INDF register will cause indirect addressing.

Indirect addressing is possible by using the INDF register. Any instruction using the INDF register actually accesses the register pointed to by the File Select Register, FSR. Reading the INDF register itself indirectly (FSR = '0') will read 00h. Writing to the INDF register indirectly results in a no-operation (although status bits may be affected). An effective 9-bit address is obtained by concatenating the 8-bit FSR register and the IRP bit (STATUS<7>), as shown in Figure 2-6.

A simple program to clear RAM locations 20h-2Fh using indirect addressing is shown in Example 2-2.

EXAMPLE 2-2: INDIRECT ADDRESSING

```
          movlw   0x20    ;initialize pointer
          movwf   FSR     ;to RAM
NEXT      clrf    INDF    ;clear INDF register
          incf    FSR,F   ;inc pointer
          btfss   FSR,4   ;all done?
          goto    NEXT    ;no clear next
CONTINUE
          :               ;yes continue
```

FIGURE 2-6: DIRECT/INDIRECT ADDRESSING

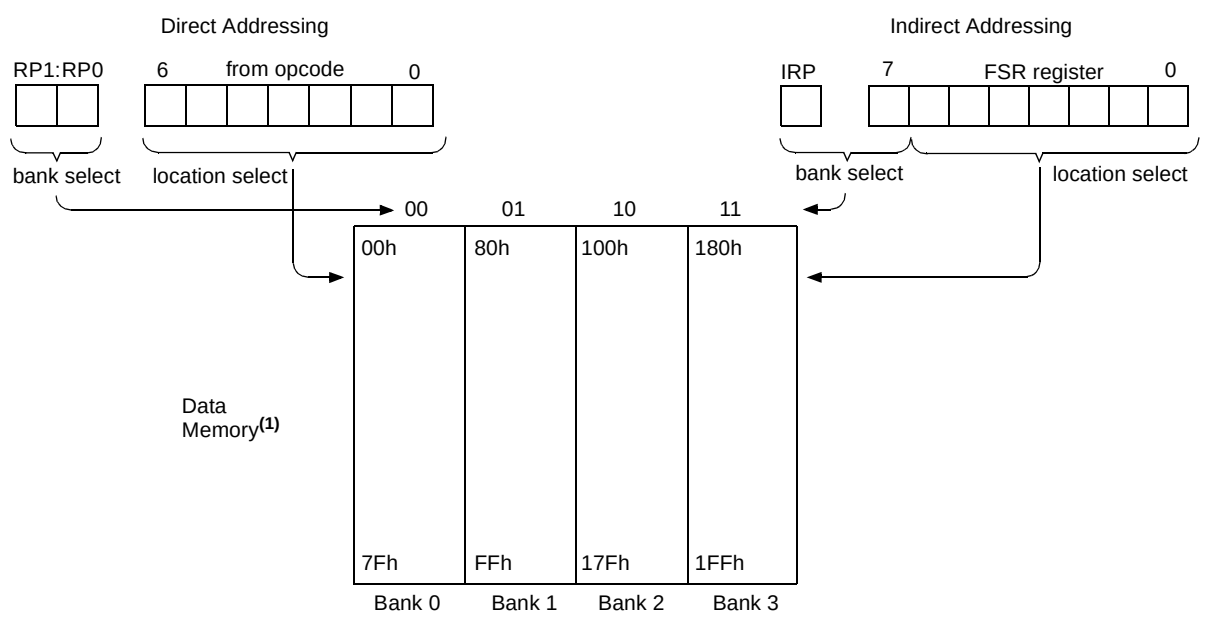

Note 1: For register file map detail see Figure 2-3.

NOTES:

 © 2000 Microchip Technology Inc.

3.0 I/O PORTS

Some pins for these I/O ports are multiplexed with an alternate function for the peripheral features on the device. In general, when a peripheral is enabled, that pin may not be used as a general purpose I/O pin.

Additional information on I/O ports may be found in the PICmicro™ Mid-Range Reference Manual, (DS33023).

3.1 PORTA and the TRISA Register

PORTA is a 6-bit wide, bi-directional port. The corresponding data direction register is TRISA. Setting a TRISA bit (=1) will make the corresponding PORTA pin an input (i.e., put the corresponding output driver in a hi-impedance mode). Clearing a TRISA bit (=0) will make the corresponding PORTA pin an output (i.e., put the contents of the output latch on the selected pin).

Reading the PORTA register reads the status of the pins, whereas writing to it will write to the port latch. All write operations are read-modify-write operations. Therefore, a write to a port implies that the port pins are read, the value is modified and then written to the port data latch.

Pin RA4 is multiplexed with the Timer0 module clock input to become the RA4/T0CKI pin. The RA4/T0CKI pin is a Schmitt Trigger input and an open drain output. All other PORTA pins have TTL input levels and full CMOS output drivers.

Other PORTA pins are multiplexed with analog inputs and analog VREF input. The operation of each pin is selected by clearing/setting the control bits in the ADCON1 register (A/D Control Register1).

Note:	On a Power-on Reset, these pins are configured as analog inputs and read as '0'.

The TRISA register controls the direction of the RA pins, even when they are being used as analog inputs. The user must ensure the bits in the TRISA register are maintained set, when using them as analog inputs.

EXAMPLE 3-1: INITIALIZING PORTA

```
BCF     STATUS, RP0    ;
BCF     STATUS, RP1    ; Bank0
CLRF    PORTA          ; Initialize PORTA by
                       ; clearing output
                       ; data latches
BSF     STATUS, RP0    ; Select Bank 1
MOVLW   0x06           ; Configure all pins
MOVWF   ADCON1         ; as digital inputs
MOVLW   0xCF           ; Value used to
                       ; initialize data
                       ; direction
MOVWF   TRISA          ; Set RA<3:0> as inputs
                       ; RA<5:4> as outputs
                       ; TRISA<7:6> are always
                       ; read as '0'.
```

FIGURE 3-1: BLOCK DIAGRAM OF RA3:RA0 AND RA5 PINS

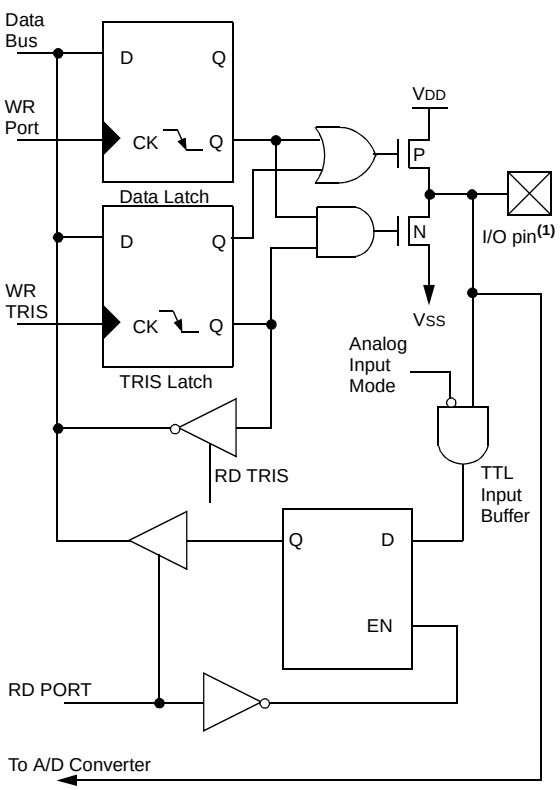

Note 1: I/O pins have protection diodes to VDD and VSS.

FIGURE 3-2: BLOCK DIAGRAM OF RA4/T0CKI PIN

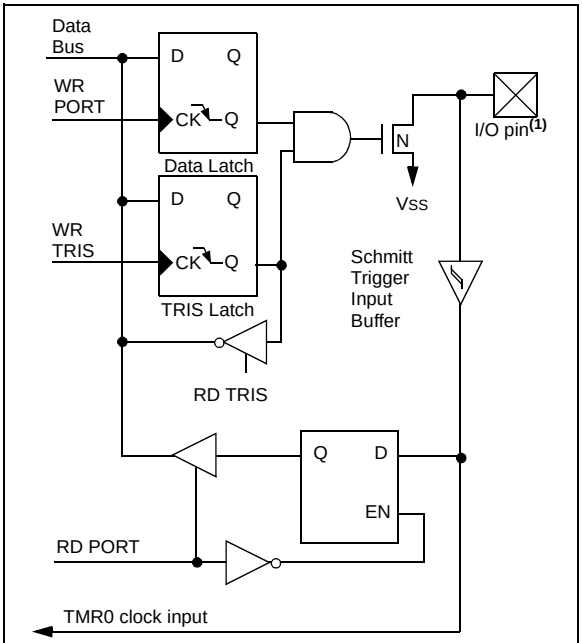

Note 1: I/O pin has protection diodes to VSS only.

TABLE 3-1: PORTA FUNCTIONS

Name	Bit#	Buffer	Function
RA0/AN0	bit0	TTL	Input/output or analog input.
RA1/AN1	bit1	TTL	Input/output or analog input.
RA2/AN2	bit2	TTL	Input/output or analog input.
RA3/AN3/VREF	bit3	TTL	Input/output or analog input or VREF.
RA4/T0CKI	bit4	ST	Input/output or external clock input for Timer0. Output is open drain type.
RA5/$\overline{SS}$/AN4	bit5	TTL	Input/output or slave select input for synchronous serial port or analog input.

Legend: TTL = TTL input, ST = Schmitt Trigger input

TABLE 3-2: SUMMARY OF REGISTERS ASSOCIATED WITH PORTA

Address	Name	Bit 7	Bit 6	Bit 5	Bit 4	Bit 3	Bit 2	Bit 1	Bit 0	Value on: POR, BOR	Value on all other RESETS
05h	PORTA	—	—	RA5	RA4	RA3	RA2	RA1	RA0	`--0x 0000`	`--0u 0000`
85h	TRISA	—	—	PORTA Data Direction Register						`--11 1111`	`--11 1111`
9Fh	ADCON1	—	—	—	—	—	PCFG2	PCFG1	PCFG0	`---- -000`	`---- -000`

Legend: `x` = unknown, `u` = unchanged, - = unimplemented locations read as '0'. Shaded cells are not used by PORTA.

Note: When using the SSP module in SPI Slave mode and $\overline{SS}$ enabled, the A/D converter must be set to one of the following modes where PCFG2:PCFG0 = `100, 101, 11x`.

 © 2000 Microchip Technology Inc.

3.2 PORTB and the TRISB Register

PORTB is an 8-bit wide, bi-directional port. The corresponding data direction register is TRISB. Setting a TRISB bit (=1) will make the corresponding PORTB pin an input (i.e., put the corresponding output driver in a hi-impedance mode). Clearing a TRISB bit (=0) will make the corresponding PORTB pin an output (i.e., put the contents of the output latch on the selected pin).

Each of the PORTB pins has a weak internal pull-up. A single control bit can turn on all the pull-ups. This is performed by clearing bit $\overline{\text{RBPU}}$ (OPTION_REG<7>). The weak pull-up is automatically turned off when the port pin is configured as an output. The pull-ups are disabled on a Power-on Reset.

FIGURE 3-3: BLOCK DIAGRAM OF RB3:RB0 PINS

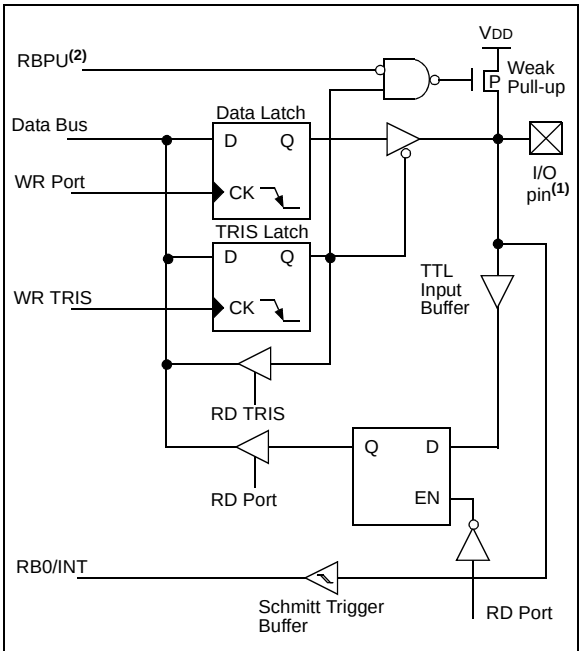

Note 1: I/O pins have diode protection to VDD and VSS.
2: To enable weak pull-ups, set the appropriate TRIS bit(s) and clear the $\overline{\text{RBPU}}$ bit (OPTION_REG<7>).

Four of PORTB's pins, RB7:RB4, have an interrupt-on-change feature. Only pins configured as inputs can cause this interrupt to occur (i.e., any RB7:RB4 pin configured as an output is excluded from the interrupt-on-change comparison). The input pins (of RB7:RB4) are compared with the old value latched on the last read of PORTB. The "mismatch" outputs of RB7:RB4 are OR'ed together to generate the RB Port Change Interrupt with flag bit RBIF (INTCON<0>).

This interrupt can wake the device from SLEEP. The user, in the Interrupt Service Routine, can clear the interrupt in the following manner:

a) Any read or write of PORTB. This will end the mismatch condition.
b) Clear flag bit RBIF.

A mismatch condition will continue to set flag bit RBIF. Reading PORTB will end the mismatch condition and allow flag bit RBIF to be cleared.

The interrupt-on-change feature is recommended for wake-up on key depression operation and operations where PORTB is only used for the interrupt-on-change feature. Polling of PORTB is not recommended while using the interrupt-on-change feature.

This interrupt on mismatch feature, together with software configureable pull-ups on these four pins, allow easy interface to a keypad and make it possible for wake-up on key depression. Refer to the Embedded Control Handbook, *"Implementing Wake-Up on Key Stroke"* (AN552).

RB0/INT is an external interrupt input pin and is configured using the INTEDG bit (OPTION_REG<6>).

RB0/INT is discussed in detail in Section 12.10.1.

FIGURE 3-4: BLOCK DIAGRAM OF RB7:RB4 PINS

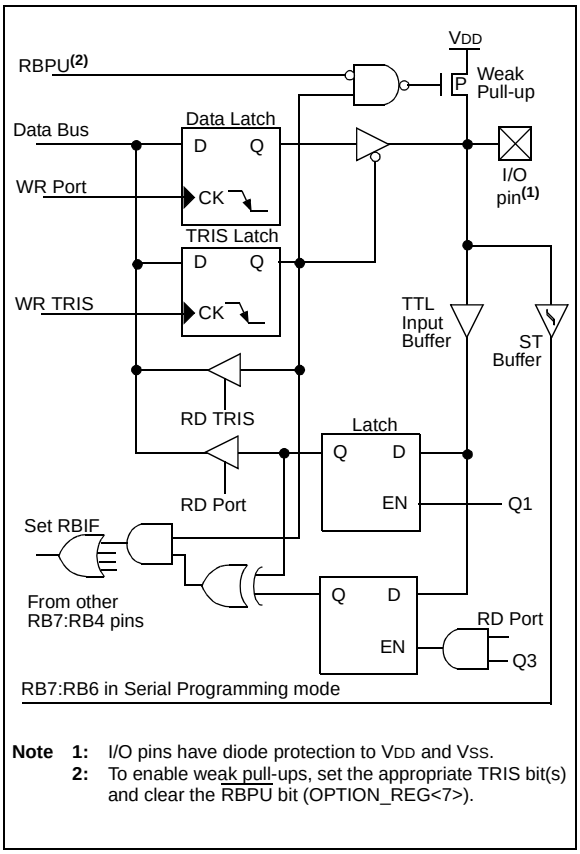

Note 1: I/O pins have diode protection to VDD and VSS.
2: To enable weak pull-ups, set the appropriate TRIS bit(s) and clear the $\overline{\text{RBPU}}$ bit (OPTION_REG<7>).

TABLE 3-3: PORTB FUNCTIONS

Name	Bit#	Buffer	Function
RB0/INT	bit0	TTL/ST(1)	Input/output pin or external interrupt input. Internal software programmable weak pull-up.
RB1	bit1	TTL	Input/output pin. Internal software programmable weak pull-up.
RB2	bit2	TTL	Input/output pin. Internal software programmable weak pull-up.
RB3	bit3	TTL	Input/output pin. Internal software programmable weak pull-up.
RB4	bit4	TTL	Input/output pin (with interrupt-on-change). Internal software programmable weak pull-up.
RB5	bit5	TTL	Input/output pin (with interrupt-on-change). Internal software programmable weak pull-up.
RB6	bit6	TTL/ST(2)	Input/output pin (with interrupt-on-change). Internal software programmable weak pull-up. Serial programming clock.
RB7	bit7	TTL/ST(2)	Input/output pin (with interrupt-on-change). Internal software programmable weak pull-up. Serial programming data.

Legend: TTL = TTL input, ST = Schmitt Trigger input

Note 1: This buffer is a Schmitt Trigger input when configured as the external interrupt.

2: This buffer is a Schmitt Trigger input when used in Serial Programming mode.

TABLE 3-4: SUMMARY OF REGISTERS ASSOCIATED WITH PORTB

Address	Name	Bit 7	Bit 6	Bit 5	Bit 4	Bit 3	Bit 2	Bit 1	Bit 0	Value on: POR, BOR	Value on all other RESETS
06h, 106h	PORTB	RB7	RB6	RB5	RB4	RB3	RB2	RB1	RB0	xxxx xxxx	uuuu uuuu
86h, 186h	TRISB	PORTB Data Direction Register								1111 1111	1111 1111
81h, 181h	OPTION_REG	$\overline{\text{RBPU}}$	INTEDG	T0CS	T0SE	PSA	PS2	PS1	PS0	1111 1111	1111 1111

Legend: x = unknown, u = unchanged. Shaded cells are not used by PORTB.

 © 2000 Microchip Technology Inc.

3.3 PORTC and the TRISC Register

PORTC is an 8-bit wide, bi-directional port. The corresponding data direction register is TRISC. Setting a TRISC bit (=1) will make the corresponding PORTC pin an input (i.e., put the corresponding output driver in a hi-impedance mode). Clearing a TRISC bit (=0) will make the corresponding PORTC pin an output (i.e., put the contents of the output latch on the selected pin).

PORTC is multiplexed with several peripheral functions (Table 3-5). PORTC pins have Schmitt Trigger input buffers.

When enabling peripheral functions, care should be taken in defining TRIS bits for each PORTC pin. Some peripherals override the TRIS bit to make a pin an output, while other peripherals override the TRIS bit to make a pin an input. Since the TRIS bit override is in effect while the peripheral is enabled, read-modify-write instructions (`BSF, BCF, XORWF`) with TRISC as destination should be avoided. The user should refer to the corresponding peripheral section for the correct TRIS bit settings.

FIGURE 3-5: PORTC BLOCK DIAGRAM (PERIPHERAL OUTPUT OVERRIDE)

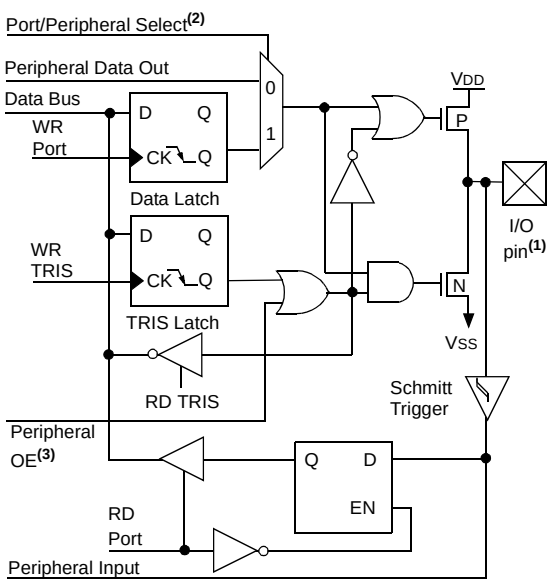

Note 1: I/O pins have diode protection to VDD and VSS.
2: Port/Peripheral select signal selects between port data and peripheral output.
3: Peripheral OE (output enable) is only activated if peripheral select is active.

TABLE 3-5: PORTC FUNCTIONS

Name	Bit#	Buffer Type	Function
RC0/T1OSO/T1CKI	bit0	ST	Input/output port pin or Timer1 oscillator output/Timer1 clock input.
RC1/T1OSI/CCP2	bit1	ST	Input/output port pin or Timer1 oscillator input or Capture2 input/ Compare2 output/PWM2 output.
RC2/CCP1	bit2	ST	Input/output port pin or Capture1 input/Compare1 output/PWM1 output.
RC3/SCK/SCL	bit3	ST	RC3 can also be the synchronous serial clock for both SPI and I^2C modes.
RC4/SDI/SDA	bit4	ST	RC4 can also be the SPI Data In (SPI mode) or Data I/O (I^2C mode).
RC5/SDO	bit5	ST	Input/output port pin or Synchronous Serial Port data output.
RC6/TX/CK	bit6	ST	Input/output port pin or USART Asynchronous Transmit or Synchronous Clock.
RC7/RX/DT	bit7	ST	Input/output port pin or USART Asynchronous Receive or Synchronous Data.

Legend: ST = Schmitt Trigger input

TABLE 3-6: SUMMARY OF REGISTERS ASSOCIATED WITH PORTC

Address	Name	Bit 7	Bit 6	Bit 5	Bit 4	Bit 3	Bit 2	Bit 1	Bit 0	Value on: POR, BOR	Value on all other RESETS
07h	PORTC	RC7	RC6	RC5	RC4	RC3	RC2	RC1	RC0	xxxx xxxx	uuuu uuuu
87h	TRISC	PORTC Data Direction Register								1111 1111	1111 1111

Legend: x = unknown, u = unchanged

3.4 PORTD and TRISD Registers

This section is not applicable to the PIC16F73 or PIC16F76.

PORTD is an 8-bit port with Schmitt Trigger input buffers. Each pin is individually configureable as an input or output.

PORTD can be configured as an 8-bit wide microprocessor port (parallel slave port) by setting control bit PSPMODE (TRISE<4>). In this mode, the input buffers are TTL.

FIGURE 3-6: PORTD BLOCK DIAGRAM (IN I/O PORT MODE)

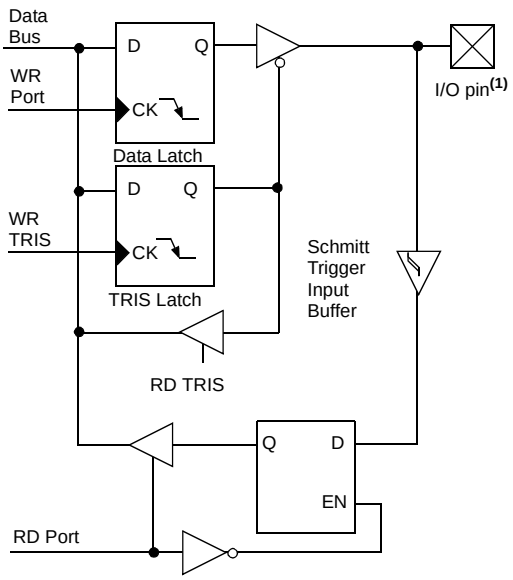

Note 1: I/O pins have protection diodes to Vdd and Vss.

TABLE 3-7: PORTD FUNCTIONS

Name	Bit#	Buffer Type	Function
RD0/PSP0	bit0	ST/TTL(1)	Input/output port pin or parallel slave port bit0
RD1/PSP1	bit1	ST/TTL(1)	Input/output port pin or parallel slave port bit1
RD2/PSP2	bit2	ST/TTL(1)	Input/output port pin or parallel slave port bit2
RD3/PSP3	bit3	ST/TTL(1)	Input/output port pin or parallel slave port bit3
RD4/PSP4	bit4	ST/TTL(1)	Input/output port pin or parallel slave port bit4
RD5/PSP5	bit5	ST/TTL(1)	Input/output port pin or parallel slave port bit5
RD6/PSP6	bit6	ST/TTL(1)	Input/output port pin or parallel slave port bit6
RD7/PSP7	bit7	ST/TTL(1)	Input/output port pin or parallel slave port bit7

Legend: ST = Schmitt Trigger input, TTL = TTL input

Note 1: Input buffers are Schmitt Triggers when in I/O mode and TTL buffer when in Parallel Slave Port mode.

TABLE 3-8: SUMMARY OF REGISTERS ASSOCIATED WITH PORTD

Address	Name	Bit 7	Bit 6	Bit 5	Bit 4	Bit 3	Bit 2	Bit 1	Bit 0	Value on: POR, BOR	Value on all other RESETS
08h	PORTD	RD7	RD6	RD5	RD4	RD3	RD2	RD1	RD0	xxxx xxxx	uuuu uuuu
88h	TRISD	PORTD Data Direction Register								1111 1111	1111 1111
89h	TRISE	IBF	OBF	IBOV	PSPMODE	—	PORTE Data Direction bits			0000 -111	0000 -111

Legend: x = unknown, u = unchanged, - = unimplemented read as '0'. Shaded cells are not used by PORTD.

 © 2000 Microchip Technology Inc.

3.5 PORTE and TRISE Register

This section is not applicable to the PIC16F73 or PIC16F76.

PORTE has three pins, RE0/$\overline{RD}$/AN5, RE1/$\overline{WR}$/AN6 and RE2/$\overline{CS}$/AN7, which are individually configureable as inputs or outputs. These pins have Schmitt Trigger input buffers.

I/O PORTE becomes control inputs for the microprocessor port when bit PSPMODE (TRISE<4>) is set. In this mode, the user must make sure that the TRISE<2:0> bits are set (pins are configured as digital inputs). Ensure ADCON1 is configured for digital I/O. In this mode, the input buffers are TTL.

Register 3-1 shows the TRISE register, which also controls the parallel slave port operation.

PORTE pins are multiplexed with analog inputs. When selected as an analog input, these pins will read as ’0’s.

TRISE controls the direction of the RE pins, even when they are being used as analog inputs. The user must make sure to keep the pins configured as inputs when using them as analog inputs.

Note:	On a Power-on Reset, these pins are configured as analog inputs and read as ‘0’.

FIGURE 3-7: PORTE BLOCK DIAGRAM (IN I/O PORT MODE)

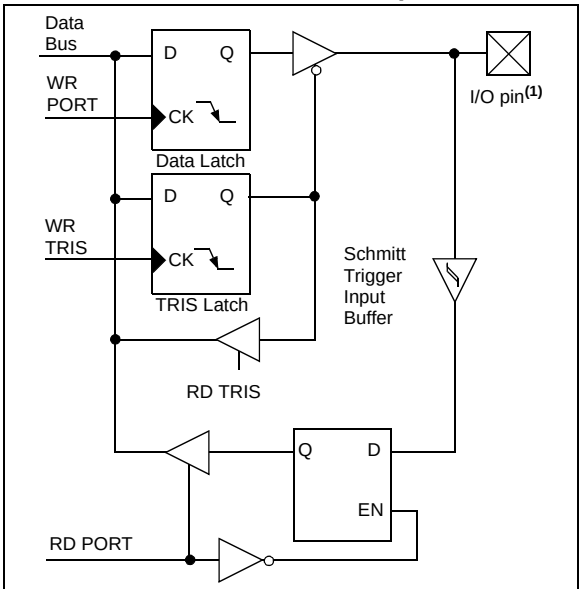

Note 1: I/O pins have protection diodes to Vdd and Vss.

REGISTER 3-1: TRISE REGISTER (ADDRESS 89h)

R-0	R-0	R/W-0	R/W-0	U-0	R/W-1	R/W-1	R/W-1
IBF	OBF	IBOV	PSPMODE	—	bit2	bit1	bit0
bit 7							bit 0

bit 7 **Parallel Slave Port Status/Control Bits**
IBF: Input Buffer Full Status bit
1 = A word has been received and is waiting to be read by the CPU
0 = No word has been received

bit 6 **OBF**: Output Buffer Full Status bit
1 = The output buffer still holds a previously written word
0 = The output buffer has been read

bit 5 **IBOV**: Input Buffer Overflow Detect bit (in Microprocessor mode)
1 = A write occurred when a previously input word has not been read (must be cleared in software)
0 = No overflow occurred

bit 4 **PSPMODE**: Parallel Slave Port Mode Select bit
1 = Parallel Slave Port mode
0 = General Purpose I/O mode

bit 3 **Unimplemented**: Read as '0'

bit 2 **PORTE Data Direction Bits**
Bit2: Direction Control bit for pin RE2/$\overline{\text{CS}}$/AN7
1 = Input
0 = Output

bit 1 **Bit1**: Direction Control bit for pin RE1/$\overline{\text{WR}}$/AN6
1 = Input
0 = Output

bit 0 **Bit0**: Direction Control bit for pin RE0/$\overline{\text{RD}}$/AN5
1 = Input
0 = Output

Legend:			
R = Readable bit	W = Writable bit	U = Unimplemented bit, read as ‘0’	
- n = Value at POR reset	’1’ = Bit is set	’0’ = Bit is cleared	x = Bit is unknown

 © 2000 Microchip Technology Inc.

TABLE 3-9: PORTE FUNCTIONS

Name	Bit#	Buffer Type	Function
RE0/$\overline{RD}$/AN5	bit0	ST/TTL(1)	Input/output port pin or read control input in Parallel Slave Port mode or analog input: $\overline{RD}$ 1 = Idle 0 = Read operation. Contents of PORTD register output to PORTD I/O pins (if chip selected).
RE1/$\overline{WR}$/AN6	bit1	ST/TTL(1)	Input/output port pin or write control input in Parallel Slave Port mode or analog input: $\overline{WR}$ 1 = Idle 0 = Write operation. Value of PORTD I/O pins latched into PORTD register (if chip selected).
RE2/$\overline{CS}$/AN7	bit2	ST/TTL(1)	Input/output port pin or chip select control input in Parallel Slave Port mode or analog input: $\overline{CS}$ 1 = Device is not selected 0 = Device is selected

Legend: ST = Schmitt Trigger input, TTL = TTL input

Note 1: Input buffers are Schmitt Triggers when in I/O mode and TTL buffers when in Parallel Slave Port mode.

TABLE 3-10: SUMMARY OF REGISTERS ASSOCIATED WITH PORTE

Addr	Name	Bit 7	Bit 6	Bit 5	Bit 4	Bit 3	Bit 2	Bit 1	Bit 0	Value on: POR, BOR	Value on all other RESETS
09h	PORTE	—	—	—	—	—	RE2	RE1	RE0	---- -xxx	---- -uuu
89h	TRISE	IBF	OBF	IBOV	PSPMODE	—	PORTE Data Direction Bits			0000 -111	0000 -111
9Fh	ADCON1	—	—	—	—	—	PCFG2	PCFG1	PCFG0	---- -000	---- -000

Legend: x = unknown, u = unchanged, - = unimplemented read as '0'. Shaded cells are not used by PORTE.

3.6 Parallel Slave Port

The Parallel Slave Port is not implemented on the PIC16F73 or PIC16F76.

PORTD operates as an 8-bit wide Parallel Slave Port, or microprocessor port when control bit PSPMODE (TRISE<4>) is set. In Slave mode, it is asynchronously readable and writable by the external world through $\overline{RD}$ control input pin RE0/$\overline{RD}$ and $\overline{WR}$ control input pin RE1/$\overline{WR}$.

It can directly interface to an 8-bit microprocessor data bus. The external microprocessor can read or write the PORTD latch as an 8-bit latch. Setting bit PSPMODE enables port pin RE0/$\overline{RD}$ to be the $\overline{RD}$ input, RE1/$\overline{WR}$ to be the $\overline{WR}$ input and RE2/$\overline{CS}$ to be the $\overline{CS}$ (chip select) input. For this functionality, the corresponding data direction bits of the TRISE register (TRISE<2:0>) must be configured as inputs (set). The A/D port configuration bits PCFG3:PCFG0 (ADCON1<3:0>) must be set to configure pins RE2:RE0 as digital I/O.

There are actually two 8-bit latches. One for data output and one for data input. The user writes 8-bit data to the PORTD data latch and reads data from the port pin latch (note that they have the same address). In this mode, the TRISD register is ignored, since the external device is controlling the direction of data flow.

A write to the PSP occurs when both the $\overline{CS}$ and $\overline{WR}$ lines are first detected low. When either the $\overline{CS}$ or $\overline{WR}$ lines become high (level triggered), the Input Buffer Full (IBF) status flag bit (TRISE<7>) is set on the Q4 clock cycle, following the next Q2 cycle, to signal the write is complete (Figure 3-9). The interrupt flag bit PSPIF (PIR1<7>) is also set on the same Q4 clock cycle. IBF can only be cleared by reading the PORTD input latch. The Input Buffer Overflow (IBOV) status flag bit (TRISE<5>) is set if a second write to the PSP is attempted when the previous byte has not been read out of the buffer.

A read from the PSP occurs when both the $\overline{CS}$ and $\overline{RD}$ lines are first detected low. The Output Buffer Full (OBF) status flag bit (TRISE<6>) is cleared immediately (Figure 3-10) indicating that the PORTD latch is waiting to be read by the external bus. When either the $\overline{CS}$ or $\overline{RD}$ pin becomes high (level triggered), the interrupt flag bit PSPIF is set on the Q4 clock cycle, following the next Q2 cycle, indicating that the read is complete. OBF remains low until data is written to PORTD by the user firmware.

When not in PSP mode, the IBF and OBF bits are held clear. However, if flag bit IBOV was previously set, it must be cleared in firmware.

An interrupt is generated and latched into flag bit PSPIF when a read or write operation is completed. PSPIF must be cleared by the user in firmware and the interrupt can be disabled by clearing the interrupt enable bit PSPIE (PIE1<7>).

FIGURE 3-8: PORTD AND PORTE BLOCK DIAGRAM (PARALLEL SLAVE PORT)

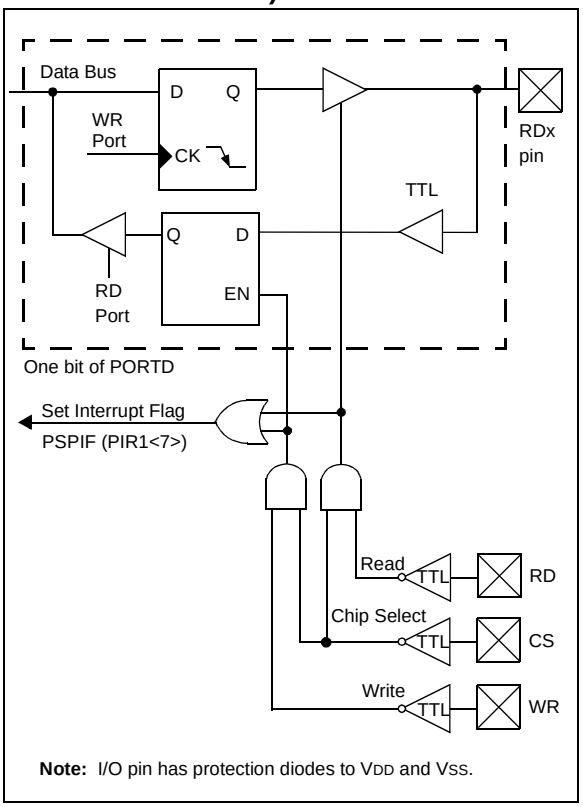

 © 2000 Microchip Technology Inc.

FIGURE 3-9: PARALLEL SLAVE PORT WRITE WAVEFORMS

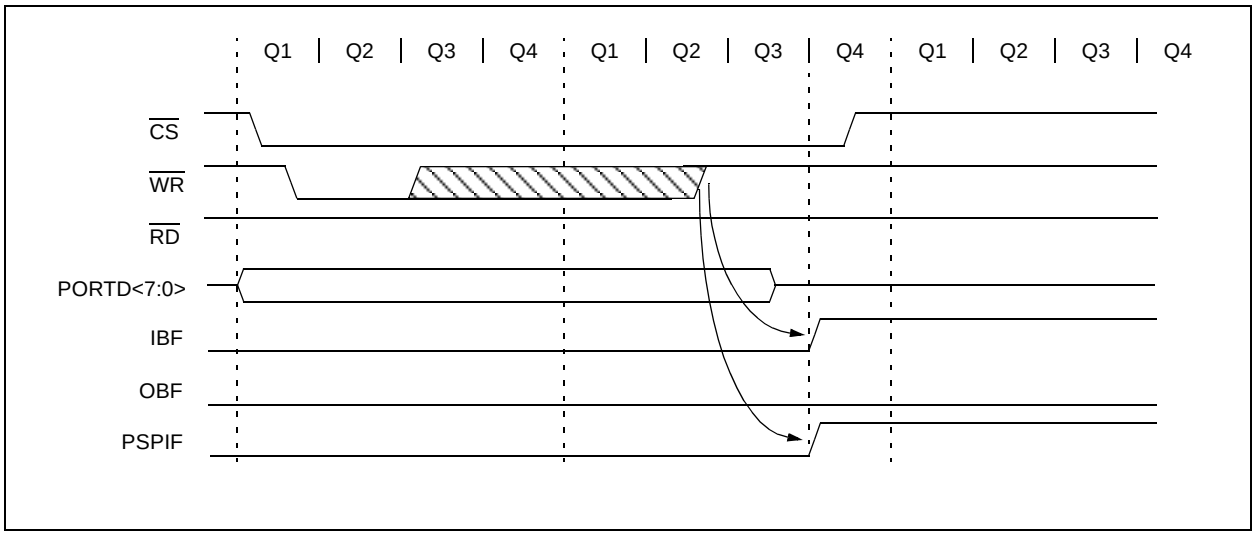

FIGURE 3-10: PARALLEL SLAVE PORT READ WAVEFORMS

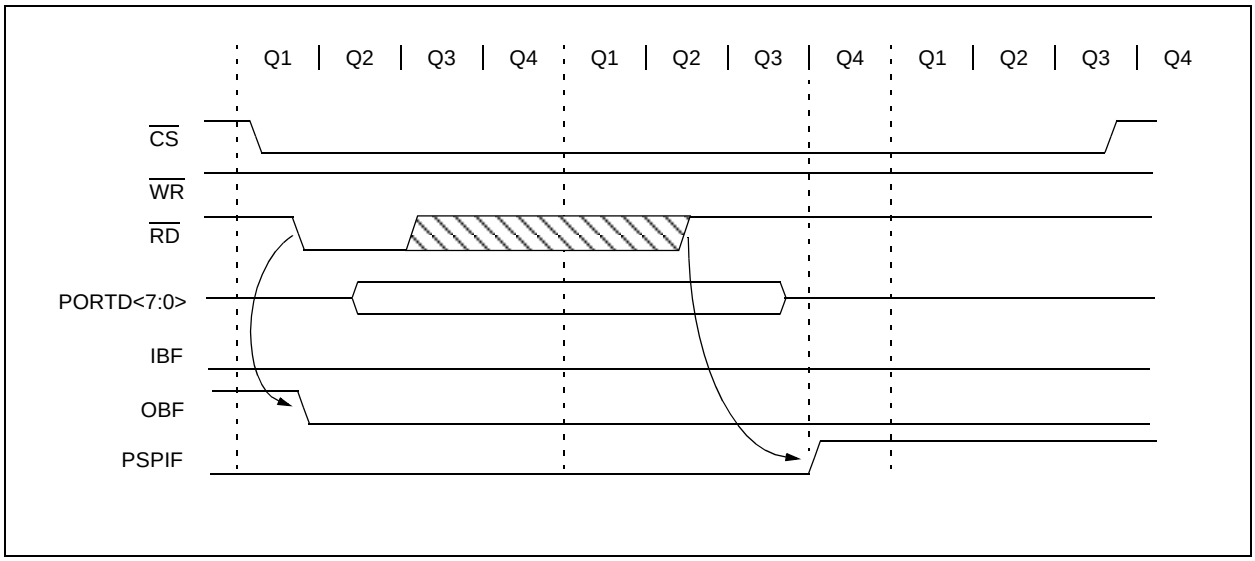

TABLE 3-11: REGISTERS ASSOCIATED WITH PARALLEL SLAVE PORT

Address	Name	Bit 7	Bit 6	Bit 5	Bit 4	Bit 3	Bit 2	Bit 1	Bit 0	Value on: POR, BOR	Value on all other RESETS
08h	PORTD	Port data latch when written: Port pins when read								xxxx xxxx	uuuu uuuu
09h	PORTE	—	—	—	—	—	RE2	RE1	RE0	---- -xxx	---- -uuu
89h	TRISE	IBF	OBF	IBOV	PSPMODE	—	PORTE Data Direction Bits			0000 -111	0000 -111
0Ch	PIR1	PSPIF(1)	ADIF	RCIF	TXIF	SSPIF	CCP1IF	TMR2IF	TMR1IF	0000 0000	0000 0000
8Ch	PIE1	PSPIE(1)	ADIE	RCIE	TXIE	SSPIE	CCP1IE	TMR2IE	TMR1IE	0000 0000	0000 0000
9Fh	ADCON1	—	—	—	—	—	PCFG2	PCFG1	PCFG0	---- -000	---- -000

Legend: x = unknown, u = unchanged, - = unimplemented read as '0'. Shaded cells are not used by the Parallel Slave Port.
Note 1: Bits PSPIE and PSPIF are reserved on the PIC16F73/76; always maintain these bits clear.

NOTES:

 © 2000 Microchip Technology Inc.

4.0 READING PROGRAM MEMORY

The FLASH Program Memory is readable during normal operation over the entire VDD range. It is indirectly addressed through Special Function Registers (SFR). Up to 14-bit numbers can be stored in memory for use as calibration parameters, serial numbers, packed 7-bit ASCII, etc. Executing a program memory location containing data that forms an invalid instruction results in a NOP.

There are five SFRs used to read the program and memory. These registers are:

- PMCON1
- PMDATA
- PMDATH
- PMADR
- PMADRH

The program memory allows word reads. Program memory access allows for checksum calculation and reading calibration tables.

When interfacing to the program memory block, the PMDATH:PMDATA registers form a two byte word, which holds the 14-bit data for reads. The PMADRH:PMADR registers form a two byte word, which holds the 13-bit address of the FLASH location being accessed. These devices can have up to 8K words of program FLASH, with an address range from 0h to 3FFFh. The unused upper bits in both the PMDATH and PMADRH registers are not implemented and read as “0’s”.

4.1 PMADR

The address registers can address up to a maximum of 8K words of program FLASH.

When selecting a program address value, the MSByte of the address is written to the PMADRH register and the LSByte is written to the PMADR register. The upper MSbits of PMADRH must always be clear.

4.2 PMCON1 Register

PMCON1 is the control register for memory accesses.

The control bit RD initiates read operations. This bit cannot be cleared, only set, in software. It is cleared in hardware at the completion of the read operation.

REGISTER 4-1: PMCON1 REGISTER (ADDRESS 18Ch)

R-1	U-0	U-0	U-0	U-x	U-0	U-0	R/S-0
—	—	—	—	—	—	—	RD
bit 7							bit 0

bit 7 **Reserved:** Read as ‘1’

bit 6-1 **Unimplemented**: Read as '0'

bit 0 **RD**: Read Control bit
1 = Initiates a FLASH read, RD is cleared in hardware. The RD bit can only be set (not cleared) in software.
0 = Does not initiate a FLASH read

Legend:			
R = Readable bit	W = Writable bit	U = Unimplemented bit, read as ‘0’	
- n = Value at POR reset	’1’ = Bit is set	’0’ = Bit is cleared	x = Bit is unknown

4.3 Reading the FLASH Program Memory

A program memory location may be read by writing two bytes of the address to the PMADR and PMADRH registers and then setting control bit RD (PMCON1<0>). Once the read control bit is set, the microcontroller will use the next two instruction cycles to read the data. The data is available in the PMDATA and PMDATH registers after the second NOP instruction. Therefore, it can be read as two bytes in the following instructions. The PMDATA and PMDATH registers will hold this value until another read operation.

EXAMPLE 4-1: FLASH PROGRAM READ

```
                BSF     STATUS, RP1      ;
                BCF     STATUS, RP0      ; Bank 2
                MOVF    ADDRH, W         ;
                MOVWF   PMADRH           ; MSByte of Program Address to read
                MOVF    ADDRL, W         ;
                MOVWF   PMADR            ; LSByte of Program Address to read
                BSF     STATUS, RP0      ; Bank 3
Required        BSF     PMCON1, RD       ; EEPROM Read
Sequence
                NOP                     ; memory is read in the next two cycles after BSF PMCON1,RD
                NOP                      ;

                BCF     STATUS, RP0      ; Bank 2


                MOVF    PMDATA, W        ; W = LSByte of Program PMDATA
                MOVF    PMDATH, W        ; W = MSByte of Program PMDATA
```

 © 2000 Microchip Technology Inc.

4.4 Operation During Code Protect

FLASH program memory has its own code protect mechanism. External Read and Write operations are disabled if this mechanism is enabled.

The microcontroller can read and execute instructions out of the internal FLASH program memory, regardless of the state of the code protect configuration bits.

TABLE 4-1: REGISTERS ASSOCIATED WITH PROGRAM FLASH

Address	Name	Bit 7	Bit 6	Bit 5	Bit 4	Bit 3	Bit 2	Bit 1	Bit 0	Value on: POR, BOR	Value on all other RESETS
10Dh	PMADR	Address Register Low Byte								xxxx xxxx	uuuu uuuu
10Fh	PMADRH	—	—	—	Address Register High Byte					xxxx xxxx	uuuu uuuu
10Ch	PMDATA	Data Register Low Byte								xxxx xxxx	uuuu uuuu
10Eh	PMDATH	—	—	Data Register High Byte						xxxx xxxx	uuuu uuuu
18Ch	PMCON1	—(1)	—	—	—	—	—	—	RD	1--- ---0	1--- ---0

Legend: x = unknown, u = unchanged, r = reserved, - = unimplemented read as '0'. Shaded cells are not used during FLASH access.

Note 1: This bit always reads as a '1'.

NOTES:

 © 2000 Microchip Technology Inc.

5.0 TIMER0 MODULE

The Timer0 module timer/counter has the following features:

- 8-bit timer/counter
- Readable and writable
- 8-bit software programmable prescaler
- Internal or external clock select
- Interrupt on overflow from FFh to 00h
- Edge select for external clock

Figure 5-1 is a block diagram of the Timer0 module and the prescaler shared with the WDT.

Additional information on the Timer0 module is available in the PICmicro™ Mid-Range MCU Family Reference Manual (DS33023).

Timer mode is selected by clearing bit T0CS (OPTION_REG<5>). In Timer mode, the Timer0 module will increment every instruction cycle (without prescaler). If the TMR0 register is written, the increment is inhibited for the following two instruction cycles. The user can work around this by writing an adjusted value to the TMR0 register.

Counter mode is selected by setting bit T0CS (OPTION_REG<5>). In Counter mode, Timer0 will increment, either on every rising or falling edge of pin RA4/T0CKI. The incrementing edge is determined by the Timer0 Source Edge Select bit T0SE (OPTION_REG<4>). Clearing bit T0SE selects the rising edge. Restrictions on the external clock input are discussed in detail in Section 5.2.

The prescaler is mutually exclusively shared between the Timer0 module and the Watchdog Timer. The prescaler is not readable or writable. Section 5.3 details the operation of the prescaler.

5.1 Timer0 Interrupt

The TMR0 interrupt is generated when the TMR0 register overflows from FFh to 00h. This overflow sets bit T0IF (INTCON<2>). The interrupt can be masked by clearing bit T0IE (INTCON<5>). Bit T0IF must be cleared in software by the Timer0 module Interrupt Service Routine, before re-enabling this interrupt. The TMR0 interrupt cannot awaken the processor from SLEEP, since the timer is shut off during SLEEP.

FIGURE 5-1: BLOCK DIAGRAM OF THE TIMER0/WDT PRESCALER

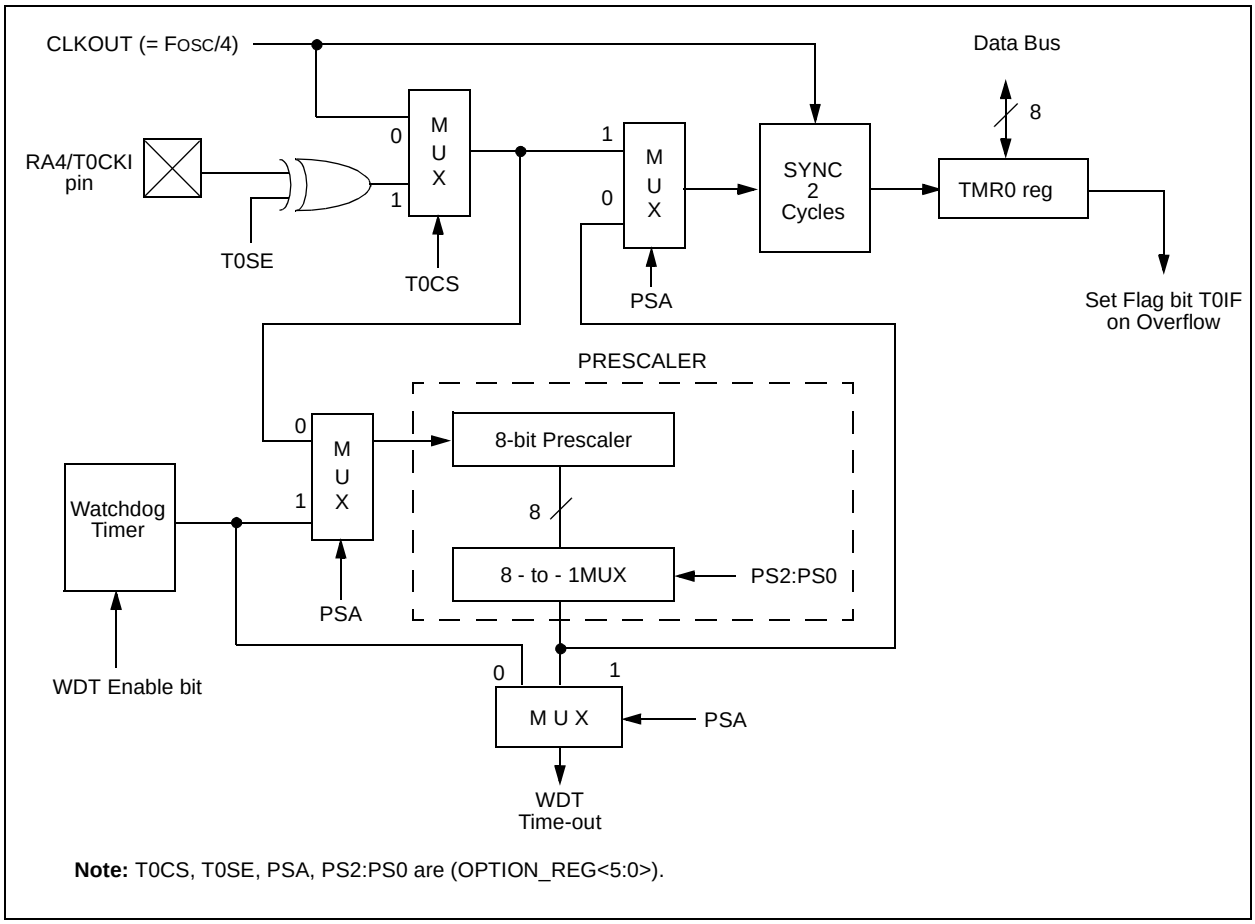

Note: T0CS, T0SE, PSA, PS2:PS0 are (OPTION_REG<5:0>).

5.2 Using Timer0 with an External Clock

When no prescaler is used, the external clock input is the same as the prescaler output. The synchronization of T0CKI, with the internal phase clocks, is accomplished by sampling the prescaler output on the Q2 and Q4 cycles of the internal phase clocks. Therefore, it is necessary for T0CKI to be high for at least 2Tosc (and a small RC delay of 20 ns) and low for at least 2Tosc (and a small RC delay of 20 ns). Refer to the electrical specification of the desired device.

5.3 Prescaler

There is only one prescaler available, which is mutually exclusively shared between the Timer0 module and the Watchdog Timer. A prescaler assignment for the Timer0 module means that there is no prescaler for the Watchdog Timer, and vice-versa. This prescaler is not readable or writable (see Figure 5-1).

The PSA and PS2:PS0 bits (OPTION_REG<3:0>) determine the prescaler assignment and prescale ratio.

When assigned to the Timer0 module, all instructions writing to the TMR0 register (e.g. `CLRF 1, MOVWF 1, BSF 1,x`....etc.) will clear the prescaler. When assigned to WDT, a `CLRWDT` instruction will clear the prescaler along with the Watchdog Timer. The prescaler is not readable or writable.

> **Note:** Writing to TMR0 when the prescaler is assigned to Timer0, will clear the prescaler count but will not change the prescaler assignment.

REGISTER 5-1: OPTION_REG REGISTER

R/W-1	R/W-1	R/W-1	R/W-1	R/W-1	R/W-1	R/W-1	R/W-1
$\overline{\text{RBPU}}$	INTEDG	T0CS	T0SE	PSA	PS2	PS1	PS0
bit 7							bit 0

bit 7 **$\overline{\text{RBPU}}$**

bit 6 **INTEDG**

bit 5 **T0CS:** TMR0 Clock Source Select bit
`1` = Transition on T0CKI pin
`0` = Internal instruction cycle clock (CLKOUT)

bit 4 **T0SE:** TMR0 Source Edge Select bit
`1` = Increment on high-to-low transition on T0CKI pin
`0` = Increment on low-to-high transition on T0CKI pin

bit 3 **PSA**: Prescaler Assignment bit
`1` = Prescaler is assigned to the WDT
`0` = Prescaler is assigned to the Timer0 module

bit 2-0 **PS2:PS0**: Prescaler Rate Select bits

Bit Value	TMR0 Rate	WDT Rate
000	1 : 2	1 : 1
001	1 : 4	1 : 2
010	1 : 8	1 : 4
011	1 : 16	1 : 8
100	1 : 32	1 : 16
101	1 : 64	1 : 32
110	1 : 128	1 : 64
111	1 : 256	1 : 128

Legend:			
R = Readable bit	W = Writable bit	U = Unimplemented bit, read as ‘0’	
- n = Value at POR reset	’1’ = Bit is set	’0’ = Bit is cleared	x = Bit is unknown

> **Note:** To avoid an unintended device RESET, the instruction sequence shown in the PICmicro™ Mid-Range MCU Family Reference Manual (DS33023) must be executed when changing the prescaler assignment from Timer0 to the WDT. This sequence must be followed even if the WDT is disabled.

 © 2000 Microchip Technology Inc.

TABLE 5-1: REGISTERS ASSOCIATED WITH TIMER0

Address	Name	Bit 7	Bit 6	Bit 5	Bit 4	Bit 3	Bit 2	Bit 1	Bit 0	Value on: POR, BOR	Value on all other RESETS
01h,101h	TMR0	Timer0 Module's Register								xxxx xxxx	uuuu uuuu
0Bh,8Bh, 10Bh,18Bh	INTCON	GIE	PEIE	T0IE	INTE	RBIE	T0IF	INTF	RBIF	0000 000x	0000 000u
81h,181h	OPTION_REG	$\overline{\text{RBPU}}$	INTEDG	T0CS	T0SE	PSA	PS2	PS1	PS0	1111 1111	1111 1111

Legend: x = unknown, u = unchanged, - = unimplemented locations read as '0'. Shaded cells are not used by Timer0.

NOTES:

 © 2000 Microchip Technology Inc.

6.0 TIMER1 MODULE

The Timer1 module is a 16-bit timer/counter consisting of two 8-bit registers (TMR1H and TMR1L), which are readable and writable. The TMR1 Register pair (TMR1H:TMR1L) increments from 0000h to FFFFh and rolls over to 0000h. The TMR1 Interrupt, if enabled, is generated on overflow, which is latched in interrupt flag bit TMR1IF (PIR1<0>). This interrupt can be enabled/disabled by setting/clearing TMR1 interrupt enable bit TMR1IE (PIE1<0>).

Timer1 can operate in one of two modes:

- As a timer
- As a counter

The operating mode is determined by the clock select bit, TMR1CS (T1CON<1>).

In Timer mode, Timer1 increments every instruction cycle. In Counter mode, it increments on every rising edge of the external clock input.

Timer1 can be enabled/disabled by setting/clearing control bit TMR1ON (T1CON<0>).

Timer1 also has an internal “RESET input”. This RESET can be generated by either of the two CCP modules (Section 8.0). Register 6-1 shows the Timer1 Control register.

When the Timer1 oscillator is enabled (T1OSCEN is set), the RC1/T1OSI/CCP2 and RC0/T1OSO/T1CKI pins become inputs. That is, the TRISC<1:0> value is ignored and these pins read as ‘0’.

Additional information on timer modules is available in the PICmicro™ Mid-Range MCU Family Reference Manual (DS33023).

REGISTER 6-1: T1CON: TIMER1 CONTROL REGISTER (ADDRESS 10h)

U-0	U-0	R/W-0	R/W-0	R/W-0	R/W-0	R/W-0	R/W-0
—	—	T1CKPS1	T1CKPS0	T1OSCEN	$\overline{\text{T1SYNC}}$	TMR1CS	TMR1ON
bit 7							bit 0

bit 7-6 **Unimplemented:** Read as ‘0’

bit 5-4 **T1CKPS1:T1CKPS0**: Timer1 Input Clock Prescale Select bits
11 = 1:8 Prescale value
10 = 1:4 Prescale value
01 = 1:2 Prescale value
00 = 1:1 Prescale value

bit 3 **T1OSCEN**: Timer1 Oscillator Enable Control bit
1 = Oscillator is enabled
0 = Oscillator is shut off (The oscillator inverter is turned off to eliminate power drain)

bit 2 **T1SYNC**: Timer1 External Clock Input Synchronization Control bit

TMR1CS = 1
1 = Do not synchronize external clock input
0 = Synchronize external clock input

TMR1CS = 0
This bit is ignored. Timer1 uses the internal clock when TMR1CS = 0.

bit 1 **TMR1CS**: Timer1 Clock Source Select bit
1 = External clock from pin RC0/T1OSO/T1CKI (on the rising edge)
0 = Internal clock (FOSC/4)

bit 0 **TMR1ON**: Timer1 On bit
1 = Enables Timer1
0 = Stops Timer1

Legend:			
R = Readable bit	W = Writable bit	U = Unimplemented bit, read as ‘0’	
- n = Value at POR reset	’1’ = Bit is set	’0’ = Bit is cleared	x = Bit is unknown

6.1 Timer1 Operation in Timer Mode

Timer mode is selected by clearing the TMR1CS (T1CON<1>) bit. In this mode, the input clock to the timer is FOSC/4. The synchronize control bit $\overline{\text{T1SYNC}}$ (T1CON<2>) has no effect, since the internal clock is always in sync.

6.2 Timer1 Counter Operation

Timer1 may operate in Asynchronous or Synchronous mode, depending on the setting of the TMR1CS bit.

When Timer1 is being incremented via an external source, increments occur on a rising edge. After Timer1 is enabled in Counter mode, the module must first have a falling edge before the counter begins to increment.

FIGURE 6-1: TIMER1 INCREMENTING EDGE

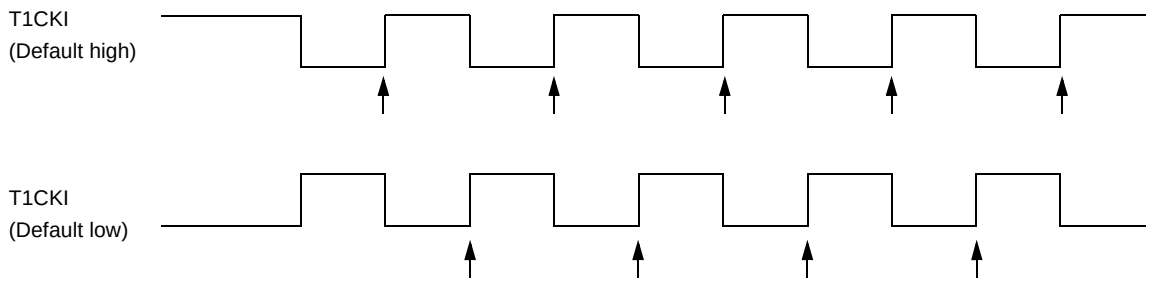

Note: Arrows indicate counter increments.

6.3 Timer1 Operation in Synchronized Counter Mode

Counter mode is selected by setting bit TMR1CS. In this mode, the timer increments on every rising edge of clock input on pin RC1/T1OSI/CCP2, when bit T1OSCEN is set, or on pin RC0/T1OSO/T1CKI, when bit T1OSCEN is cleared.

If $\overline{\text{T1SYNC}}$ is cleared, then the external clock input is synchronized with internal phase clocks. The synchronization is done after the prescaler stage. The prescaler stage is an asynchronous ripple counter.

In this configuration, during SLEEP mode, Timer1 will not increment even if the external clock is present, since the synchronization circuit is shut off. The prescaler however, will continue to increment.

FIGURE 6-2: TIMER1 BLOCK DIAGRAM

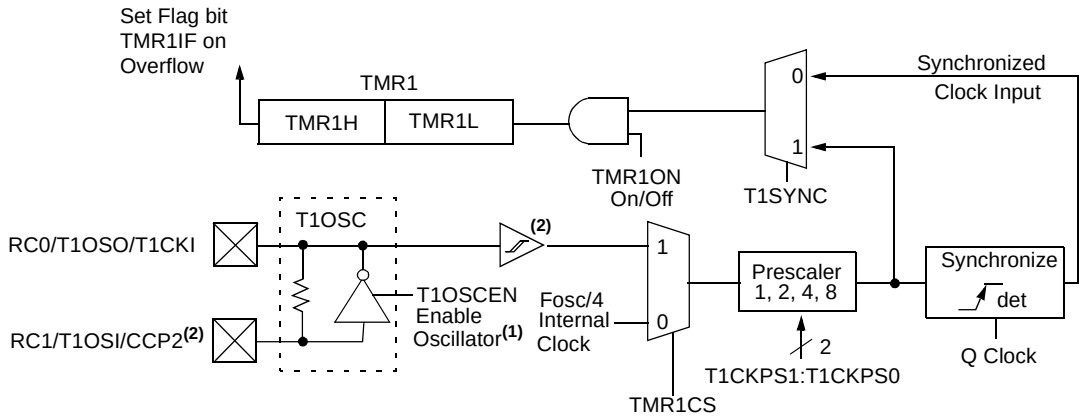

Note 1: When the T1OSCEN bit is cleared, the inverter is turned off. This eliminates power drain.
2: For the PIC16F73/76, the Schmitt Trigger is not implemented in External Clock mode.

 © 2000 Microchip Technology Inc.

6.4 Timer1 Operation in Asynchronous Counter Mode

If control bit $\overline{\text{T1SYNC}}$ (T1CON<2>) is set, the external clock input is not synchronized. The timer continues to increment asynchronous to the internal phase clocks. The timer will continue to run during SLEEP and can generate an interrupt on overflow, which will wake-up the processor. However, special precautions in software are needed to read/write the timer (Section 6.4.1).

In Asynchronous Counter mode, Timer1 can not be used as a time base for capture or compare operations.

6.4.1 READING AND WRITING TIMER1 IN ASYNCHRONOUS COUNTER MODE

Reading TMR1H or TMR1L, while the timer is running from an external asynchronous clock, will guarantee a valid read (taken care of in hardware). However, the user should keep in mind that reading the 16-bit timer in two 8-bit values itself, poses certain problems since the timer may overflow between the reads.

For writes, it is recommended that the user simply stop the timer and write the desired values. A write contention may occur by writing to the timer registers, while the register is incrementing. This may produce an unpredictable value in the timer register.

Reading the 16-bit value requires some care. Examples 12-2 and 12-3 in the PICmicro™ Mid-Range MCU Family Reference Manual (DS33023) show how to read and write Timer1 when it is running in Asynchronous mode.

6.5 Timer1 Oscillator

A crystal oscillator circuit is built-in between pins T1OSI (input) and T1OSO (amplifier output). It is enabled by setting control bit T1OSCEN (T1CON<3>). The oscillator is a low power oscillator rated up to 200 kHz. It will continue to run during SLEEP. It is primarily intended for use with a 32 kHz crystal. Table 6-1 shows the capacitor selection for the Timer1 oscillator.

The Timer1 oscillator is identical to the LP oscillator. The user must provide a software time delay to ensure proper oscillator start-up.

TABLE 6-1: CAPACITOR SELECTION FOR THE TIMER1 OSCILLATOR

Osc Type	Freq	C1	C2
LP	32 kHz	33 pF	33 pF
	100 kHz	15 pF	15 pF
	200 kHz	15 pF	15 pF
These values are for design guidance only.			
Crystals Tested:			
32.768 kHz	Epson C-001R32.768K-A		± 20 PPM
100 kHz	Epson C-2 100.00 KC-P		± 20 PPM
200 kHz	STD XTL 200.000 kHz		± 20 PPM

Note 1: Higher capacitance increases the stability of the oscillator, but also increases the start-up time.

2: Since each resonator/crystal has its own characteristics, the user should consult the resonator/crystal manufacturer for appropriate values of external components.

PRELIMINARY

6.6 Resetting Timer1 using a CCP Trigger Output

If the CCP1 or CCP2 module is configured in Compare mode to generate a “special event trigger” (CCP1M3:CCP1M0 = `1011`), this signal will reset Timer1.

> **Note:** The special event triggers from the CCP1 and CCP2 modules will not set interrupt flag bit TMR1IF (PIR1<0>).

Timer1 must be configured for either Timer or Synchronized Counter mode, to take advantage of this feature. If Timer1 is running in Asynchronous Counter mode, this RESET operation may not work.

In the event that a write to Timer1 coincides with a special event trigger from CCP1 or CCP2, the write will take precedence.

In this mode of operation, the CCPRxH:CCPRxL register pair effectively becomes the period register for Timer1.

6.7 Resetting of Timer1 Register Pair (TMR1H, TMR1L)

TMR1H and TMR1L registers are not reset to 00h on a POR, or any other RESET, except by the CCP1 and CCP2 special event triggers.

T1CON register is reset to 00h on a Power-on Reset or a Brown-out Reset, which shuts off the timer and leaves a 1:1 prescale. In all other RESETS, the register is unaffected.

6.8 Timer1 Prescaler

The prescaler counter is cleared on writes to the TMR1H or TMR1L registers.

TABLE 6-2: REGISTERS ASSOCIATED WITH TIMER1 AS A TIMER/COUNTER

Address	Name	Bit 7	Bit 6	Bit 5	Bit 4	Bit 3	Bit 2	Bit 1	Bit 0	Value on: POR, BOR	Value on all other RESETS
0Bh,8Bh, 10Bh,18Bh	INTCON	GIE	PEIE	T0IE	INTE	RBIE	T0IF	INTF	RBIF	0000 000x	0000 000u
0Ch	PIR1	PSPIF(1)	ADIF	RCIF	TXIF	SSPIF	CCP1IF	TMR2IF	TMR1IF	0000 0000	0000 0000
8Ch	PIE1	PSPIE(1)	ADIE	RCIE	TXIE	SSPIE	CCP1IE	TMR2IE	TMR1IE	0000 0000	0000 0000
0Eh	TMR1L	Holding register for the Least Significant Byte of the 16-bit TMR1 register								xxxx xxxx	uuuu uuuu
0Fh	TMR1H	Holding register for the Most Significant Byte of the 16-bit TMR1 register								xxxx xxxx	uuuu uuuu
10h	T1CON	—	—	T1CKPS1	T1CKPS0	T1OSCEN	$\overline{\text{T1SYNC}}$	TMR1CS	TMR1ON	--00 0000	--uu uuuu

Legend: x = unknown, u = unchanged, - = unimplemented read as '0'. Shaded cells are not used by the Timer1 module.

Note 1: Bits PSPIE and PSPIF are reserved on the PIC16F73/76; always maintain these bits clear.

 © 2000 Microchip Technology Inc.

7.0 TIMER2 MODULE

Timer2 is an 8-bit timer with a prescaler and a postscaler. It can be used as the PWM time base for the PWM mode of the CCP module(s). The TMR2 register is readable and writable, and is cleared on any device RESET.

The input clock (FOSC/4) has a prescale option of 1:1, 1:4 or 1:16, selected by control bits T2CKPS1:T2CKPS0 (T2CON<1:0>).

The Timer2 module has an 8-bit period register, PR2. Timer2 increments from 00h until it matches PR2 and then resets to 00h on the next increment cycle. PR2 is a readable and writable register. The PR2 register is initialized to FFh upon RESET.

The match output of TMR2 goes through a 4-bit postscaler (which gives a 1:1 to 1:16 scaling inclusive) to generate a TMR2 interrupt (latched in flag bit TMR2IF, (PIR1<1>)).

Timer2 can be shut off by clearing control bit TMR2ON (T2CON<2>) to minimize power consumption.

Register 7-1 shows the Timer2 control register.

Additional information on timer modules is available in the PICmicro™ Mid-Range MCU Family Reference Manual (DS33023).

7.1 Timer2 Prescaler and Postscaler

The prescaler and postscaler counters are cleared when any of the following occurs:

- a write to the TMR2 register
- a write to the T2CON register
- any device RESET (POR, $\overline{\text{MCLR}}$ Reset, WDT Reset or BOR)

TMR2 is not cleared when T2CON is written.

7.2 Output of TMR2

The output of TMR2 (before the postscaler) is fed to the SSP module, which optionally uses it to generate shift clock.

FIGURE 7-1: TIMER2 BLOCK DIAGRAM

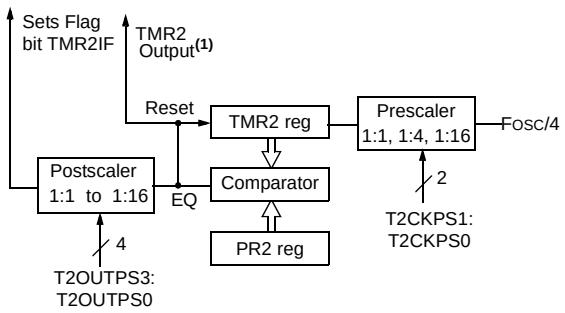

Note 1: TMR2 register output can be software selected by the SSP module as a baud clock.

REGISTER 7-1: T2CON: TIMER2 CONTROL REGISTER (ADDRESS 12h)

U-0	R/W-0	R/W-0	R/W-0	R/W-0	R/W-0	R/W-0	R/W-0
—	TOUTPS3	TOUTPS2	TOUTPS1	TOUTPS0	TMR2ON	T2CKPS1	T2CKPS0
bit 7							bit 0

bit 7 **Unimplemented:** Read as ‘0’

bit 6-3 **TOUTPS3:TOUTPS0**: Timer2 Output Postscale Select bits
`0000` = 1:1 Postscale
`0001` = 1:2 Postscale
`0010` = 1:3 Postscale
•
•
•
`1111` = 1:16 Postscale

bit 2 **TMR2ON**: Timer2 On bit
`1` = Timer2 is on
`0` = Timer2 is off

bit 1-0 **T2CKPS1:T2CKPS0**: Timer2 Clock Prescale Select bits
`00` = Prescaler is 1
`01` = Prescaler is 4
`1x` = Prescaler is 16

Legend:			
R = Readable bit	W = Writable bit	U = Unimplemented bit, read as ‘0’	
- n = Value at POR reset	’1’ = Bit is set	’0’ = Bit is cleared	x = Bit is unknown

TABLE 7-1: REGISTERS ASSOCIATED WITH TIMER2 AS A TIMER/COUNTER

Address	Name	Bit 7	Bit 6	Bit 5	Bit 4	Bit 3	Bit 2	Bit 1	Bit 0	Value on: POR, BOR	Value on all other RESETS
0Bh,8Bh, 10Bh,18Bh	INTCON	GIE	PEIE	T0IE	INTE	RBIE	T0IF	INTF	RBIF	0000 000x	0000 000u
0Ch	PIR1	PSPIF(1)	ADIF	RCIF	TXIF	SSPIF	CCP1IF	TMR2IF	TMR1IF	0000 0000	0000 0000
8Ch	PIE1	PSPIE(1)	ADIE	RCIE	TXIE	SSPIE	CCP1IE	TMR2IE	TMR1IE	0000 0000	0000 0000
11h	TMR2	Timer2 Module's Register								0000 0000	0000 0000
12h	T2CON	—	TOUTPS3	TOUTPS2	TOUTPS1	TOUTPS0	TMR2ON	T2CKPS1	T2CKPS0	-000 0000	-000 0000
92h	PR2	Timer2 Period Register								1111 1111	1111 1111

Legend: x = unknown, u = unchanged, - = unimplemented read as '0'. Shaded cells are not used by the Timer2 module.
Note 1: Bits PSPIE and PSPIF are reserved on the PIC16F73/76; always maintain these bits clear.

 © 2000 Microchip Technology Inc.

8.0 CAPTURE/COMPARE/PWM MODULES

Each Capture/Compare/PWM (CCP) module contains a 16-bit register which can operate as a:

- 16-bit Capture register
- 16-bit Compare register
- PWM Master/Slave Duty Cycle register

Both the CCP1 and CCP2 modules are identical in operation, with the exception being the operation of the special event trigger. Table 8-1 and Table 8-2 show the resources and interactions of the CCP module(s). In the following sections, the operation of a CCP module is described with respect to CCP1. CCP2 operates the same as CCP1, except where noted.

8.1 CCP1 Module

Capture/Compare/PWM Register1 (CCPR1) is comprised of two 8-bit registers: CCPR1L (low byte) and CCPR1H (high byte). The CCP1CON register controls the operation of CCP1. The special event trigger is generated by a compare match and will reset Timer1.

8.2 CCP2 Module

Capture/Compare/PWM Register1 (CCPR1) is comprised of two 8-bit registers: CCPR1L (low byte) and CCPR1H (high byte). The CCP2CON register controls the operation of CCP2. The special event trigger is generated by a compare match and will reset Timer1 and start an A/D conversion (if the A/D module is enabled).

Additional information on CCP modules is available in the PICmicro™ Mid-Range MCU Family Reference Manual (DS33023) and in Application Note 594, “Using the CCP Modules” (DS00594).

TABLE 8-1: CCP MODE - TIMER RESOURCES REQUIRED

CCP Mode	Timer Resource
Capture	Timer1
Compare	Timer1
PWM	Timer2

TABLE 8-2: INTERACTION OF TWO CCP MODULES

CCPx Mode	CCPy Mode	Interaction
Capture	Capture	Same TMR1 time base.
Capture	Compare	The compare should be configured for the special event trigger, which clears TMR1.
Compare	Compare	The compare(s) should be configured for the special event trigger, which clears TMR1.
PWM	PWM	The PWMs will have the same frequency and update rate (TMR2 interrupt).
PWM	Capture	None.
PWM	Compare	None.

REGISTER 8-1: CCP1CON REGISTER/CCP2CON REGISTER (ADDRESS: 17h/1Dh)

U-0	U-0	R/W-0	R/W-0	R/W-0	R/W-0	R/W-0	R/W-0
—	—	CCPxX	CCPxY	CCPxM3	CCPxM2	CCPxM1	CCPxM0
bit 7							bit 0

bit 7-6 **Unimplemented:** Read as '0'

bit 5-4 **CCPxX:CCPxY**: PWM Least Significant bits

Capture Mode:
Unused

Compare Mode:
Unused

PWM Mode:
These bits are the two LSbs of the PWM duty cycle. The eight MSbs are found in CCPRxL.

bit 3-0 **CCPxM3:CCPxM0**: CCPx Mode Select bits
`0000` = Capture/Compare/PWM disabled (resets CCPx module)
`0100` = Capture mode, every falling edge
`0101` = Capture mode, every rising edge
`0110` = Capture mode, every 4th rising edge
`0111` = Capture mode, every 16th rising edge
`1000` = Compare mode, set output on match (CCPxIF bit is set)
`1001` = Compare mode, clear output on match (CCPxIF bit is set)
`1010` = Compare mode, generate software interrupt on match (CCPxIF bit is set, CCPx pin is unaffected)
`1011` = Compare mode, trigger special event (CCPxIF bit is set, CCPx pin is unaffected); CCP1 resets TMR1; CCP2 resets TMR1 and starts an A/D conversion (if A/D module is enabled)
`11xx` = PWM mode

Legend:			
R = Readable bit	W = Writable bit	U = Unimplemented bit, read as ‘0’	
- n = Value at POR reset	’1’ = Bit is set	’0’ = Bit is cleared	x = Bit is unknown

 © 2000 Microchip Technology Inc.

8.3 Capture Mode

In Capture mode, CCPR1H:CCPR1L captures the 16-bit value of the TMR1 register when an event occurs on pin RC2/CCP1. An event is defined as one of the following and is configured by CCPxCON<3:0>:

- Every falling edge
- Every rising edge
- Every 4th rising edge
- Every 16th rising edge

An event is selected by control bits CCP1M3:CCP1M0 (CCP1CON<3:0>). When a capture is made, the interrupt request flag bit CCP1IF (PIR1<2>) is set. The interrupt flag must be cleared in software. If another capture occurs before the value in register CCPR1 is read, the old captured value is overwritten by the new captured value.

8.3.1 CCP PIN CONFIGURATION

In Capture mode, the RC2/CCP1 pin should be configured as an input by setting the TRISC<2> bit.

Note:	If the RC2/CCP1 pin is configured as an output, a write to the port can cause a capture condition.

FIGURE 8-1: CAPTURE MODE OPERATION BLOCK DIAGRAM

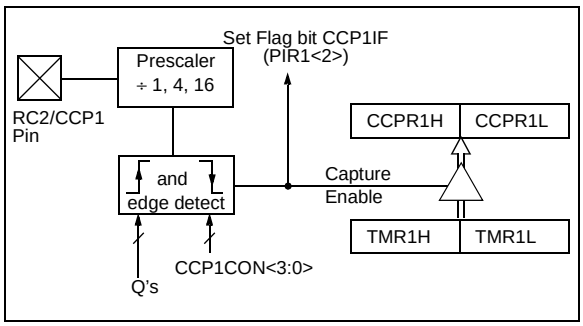

8.3.2 TIMER1 MODE SELECTION

Timer1 must be running in Timer mode or Synchronized Counter mode for the CCP module to use the capture feature. In Asynchronous Counter mode, the capture operation may not work.

8.3.3 SOFTWARE INTERRUPT

When the Capture mode is changed, a false capture interrupt may be generated. The user should keep bit CCP1IE (PIE1<2>) clear to avoid false interrupts and should clear the flag bit CCP1IF following any such change in operating mode.

8.3.4 CCP PRESCALER

There are four prescaler settings, specified by bits CCP1M3:CCP1M0. Whenever the CCP module is turned off, or the CCP module is not in Capture mode, the prescaler counter is cleared. Any RESET will clear the prescaler counter.

Switching from one capture prescaler to another may generate an interrupt. Also, the prescaler counter will not be cleared, therefore, the first capture may be from a non-zero prescaler. Example 8-1 shows the recommended method for switching between capture prescalers. This example also clears the prescaler counter and will not generate the “false” interrupt.

EXAMPLE 8-1: CHANGING BETWEEN CAPTURE PRESCALERS

```
CLRF    CCP1CON      ;Turn CCP module off
MOVLW   NEW_CAPT_PS  ;Load the W reg with
                     ; the new prescaler
                     ; move value and CCP ON
MOVWF   CCP1CON      ;Load CCP1CON with this
                     ; value
```

8.4 Compare Mode

In Compare mode, the 16-bit CCPR1 register value is constantly compared against the TMR1 register pair value. When a match occurs, the RC2/CCP1 pin is:

- Driven high
- Driven low
- Remains unchanged

The action on the pin is based on the value of control bits CCP1M3:CCP1M0 (CCP1CON<3:0>). At the same time, interrupt flag bit CCP1IF is set.

FIGURE 8-2: COMPARE MODE OPERATION BLOCK DIAGRAM

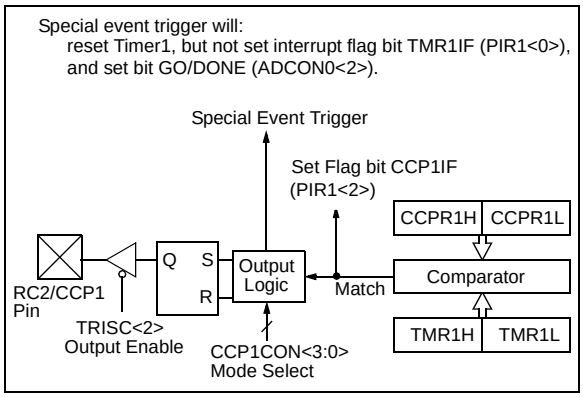

8.4.1 CCP PIN CONFIGURATION

The user must configure the RC2/CCP1 pin as an output by clearing the TRISC<2> bit.

> **Note:** Clearing the CCP1CON register will force the RC2/CCP1 compare output latch to the default low level. This is not the PORTC I/O data latch.

8.4.2 TIMER1 MODE SELECTION

Timer1 must be running in Timer mode or Synchronized Counter mode if the CCP module is using the compare feature. In Asynchronous Counter mode, the compare operation may not work.

8.4.3 SOFTWARE INTERRUPT MODE

When Generate Software Interrupt mode is chosen, the CCP1 pin is not affected. The CCPIF bit is set causing a CCP interrupt (if enabled).

8.4.4 SPECIAL EVENT TRIGGER

In this mode, an internal hardware trigger is generated, which may be used to initiate an action.

The special event trigger output of CCP1 resets the TMR1 register pair. This allows the CCPR1 register to effectively be a 16-bit programmable period register for Timer1.

The special event trigger output of CCP2 resets the TMR1 register pair and starts an A/D conversion (if the A/D module is enabled).

> **Note:** The special event trigger from the CCP1 and CCP2 modules will not set interrupt flag bit TMR1IF (PIR1<0>).

8.5 PWM Mode (PWM)

In Pulse Width Modulation mode, the CCPx pin produces up to a 10-bit resolution PWM output. Since the CCP1 pin is multiplexed with the PORTC data latch, the TRISC<2> bit must be cleared to make the CCP1 pin an output.

> **Note:** Clearing the CCP1CON register will force the CCP1 PWM output latch to the default low level. This is not the PORTC I/O data latch.

Figure 8-3 shows a simplified block diagram of the CCP module in PWM mode.

For a step-by-step procedure on how to set up the CCP module for PWM operation, see Section 8.5.3.

FIGURE 8-3: SIMPLIFIED PWM BLOCK DIAGRAM

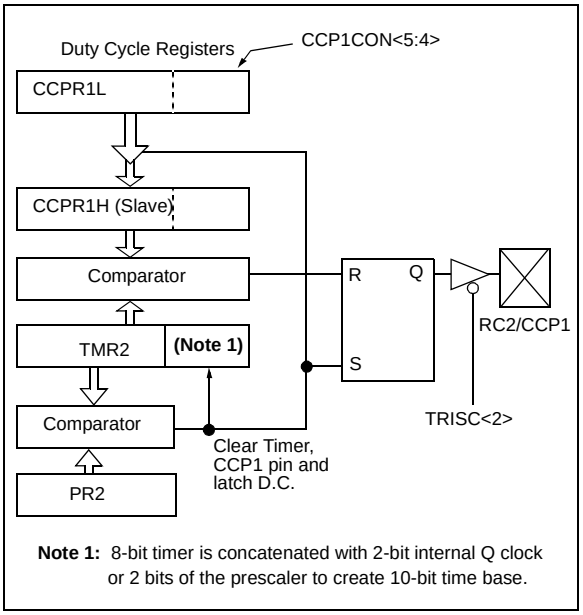

 © 2000 Microchip Technology Inc.

A PWM output (Figure 8-4) has a time base (period) and a time that the output stays high (duty cycle). The frequency of the PWM is the inverse of the period (1/period).

FIGURE 8-4: PWM OUTPUT

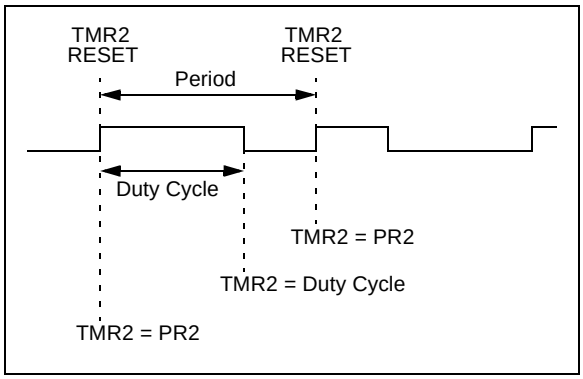

8.5.1 PWM PERIOD

The PWM period is specified by writing to the PR2 register. The PWM period can be calculated using the following formula:

$$\text{PWM period} = [(PR2) + 1] \cdot 4 \cdot T_{OSC} \cdot (\text{TMR2 prescale value})$$

PWM frequency is defined as 1 / [PWM period].

When TMR2 is equal to PR2, the following three events occur on the next increment cycle:

- TMR2 is cleared
- The CCP1 pin is set (exception: if PWM duty cycle = 0%, the CCP1 pin will not be set)
- The PWM duty cycle is latched from CCPR1L into CCPR1H

Note:	The Timer2 postscaler (see Section 8.3) is not used in the determination of the PWM frequency. The postscaler could be used to have a servo update rate at a different frequency than the PWM output.

8.5.2 PWM DUTY CYCLE

The PWM duty cycle is specified by writing to the CCPR1L register and to the CCP1CON<5:4> bits. Up to 10-bit resolution is available. The CCPR1L contains the eight MSbs and the CCP1CON<5:4> contains the two LSbs. This 10-bit value is represented by CCPR1L:CCP1CON<5:4>. The following equation is used to calculate the PWM duty cycle in time:

$$\text{PWM duty cycle} = (CCPR1L{:}CCP1CON\langle 5{:}4\rangle) \cdot T_{osc} \cdot (\text{TMR2 prescale value})$$

CCPR1L and CCP1CON<5:4> can be written to at any time, but the duty cycle value is not latched into CCPR1H until after a match between PR2 and TMR2 occurs (i.e., the period is complete). In PWM mode, CCPR1H is a read only register.

The CCPR1H register and a 2-bit internal latch are used to double buffer the PWM duty cycle. This double buffering is essential for glitchless PWM operation.

When the CCPR1H and 2-bit latch match TMR2 concatenated with an internal 2-bit Q clock or 2 bits of the TMR2 prescaler, the CCP1 pin is cleared.

Maximum PWM resolution (bits) for a given PWM frequency:

$$\text{Resolution} = \frac{\log\left(\frac{F_{OSC}}{F_{PWM}}\right)}{\log(2)} \text{ bits}$$

Note:	If the PWM duty cycle value is longer than the PWM period, the CCP1 pin will not be cleared.

8.5.3 SET-UP FOR PWM OPERATION

The following steps should be taken when configuring the CCP module for PWM operation:

1. Set the PWM period by writing to the PR2 register.
2. Set the PWM duty cycle by writing to the CCPR1L register and CCP1CON<5:4> bits.
3. Make the CCP1 pin an output by clearing the TRISC<2> bit.
4. Set the TMR2 prescale value and enable Timer2 by writing to T2CON.
5. Configure the CCP1 module for PWM operation.

TABLE 8-3: EXAMPLE PWM FREQUENCIES AND RESOLUTIONS AT 20 MHz

PWM Frequency	1.22 kHz	4.88 kHz	19.53 kHz	78.12 kHz	156.3 kHz	208.3 kHz
Timer Prescale (1, 4, 16)	16	4	1	1	1	1
PR2 Value	0xFF	0xFF	0xFF	0x3F	0x1F	0x17
Maximum Resolution (bits)	10	10	10	8	7	5.5

TABLE 8-4: REGISTERS ASSOCIATED WITH CAPTURE, COMPARE, AND TIMER1

Address	Name	Bit 7	Bit 6	Bit 5	Bit 4	Bit 3	Bit 2	Bit 1	Bit 0	Value on: POR, BOR	Value on all other RESETS
0Bh,8Bh, 10Bh,18Bh	INTCON	GIE	PEIE	T0IE	INTE	RBIE	T0IF	INTF	RBIF	0000 000x	0000 000u
0Ch	PIR1	PSPIF(1)	ADIF	RCIF	TXIF	SSPIF	CCP1IF	TMR2IF	TMR1IF	0000 0000	0000 0000
0Dh	PIR2	—	—	—	—	—	—	—	CCP2IF	---- ---0	---- ---0
8Ch	PIE1	PSPIE(1)	ADIE	RCIE	TXIE	SSPIE	CCP1IE	TMR2IE	TMR1IE	0000 0000	0000 0000
8Dh	PIE2	—	—	—	—	—	—	—	CCP2IE	---- ---0	---- ---0
87h	TRISC	PORTC Data Direction Register								1111 1111	1111 1111
0Eh	TMR1L	Holding register for the Least Significant Byte of the 16-bit TMR1 register								xxxx xxxx	uuuu uuuu
0Fh	TMR1H	Holding register for the Most Significant Byte of the 16-bit TMR1 register								xxxx xxxx	uuuu uuuu
10h	T1CON	—	—	T1CKPS1	T1CKPS0	T1OSCEN	$\overline{\text{T1SYNC}}$	TMR1CS	TMR1ON	--00 0000	--uu uuuu
15h	CCPR1L	Capture/Compare/PWM register1 (LSB)								xxxx xxxx	uuuu uuuu
16h	CCPR1H	Capture/Compare/PWM register1 (MSB)								xxxx xxxx	uuuu uuuu
17h	CCP1CON	—	—	CCP1X	CCP1Y	CCP1M3	CCP1M2	CCP1M1	CCP1M0	--00 0000	--00 0000
1Bh	CCPR2L	Capture/Compare/PWM register2 (LSB)								xxxx xxxx	uuuu uuuu
1Ch	CCPR2H	Capture/Compare/PWM register2 (MSB)								xxxx xxxx	uuuu uuuu
1Dh	CCP2CON	—	—	CCP2X	CCP2Y	CCP2M3	CCP2M2	CCP2M1	CCP2M0	--00 0000	--00 0000

Legend: x = unknown, u = unchanged, - = unimplemented read as '0'. Shaded cells are not used by Capture and Timer1.
Note 1: The PSP is not implemented on the PIC16F73/76; always maintain these bits clear.

TABLE 8-5: REGISTERS ASSOCIATED WITH PWM AND TIMER2

Address	Name	Bit 7	Bit 6	Bit 5	Bit 4	Bit 3	Bit 2	Bit 1	Bit 0	Value on: POR, BOR	Value on all other RESETS
0Bh,8Bh, 10Bh,18Bh	INTCON	GIE	PEIE	T0IE	INTE	RBIE	T0IF	INTF	RBIF	0000 000x	0000 000u
0Ch	PIR1	PSPIF(1)	ADIF	RCIF	TXIF	SSPIF	CCP1IF	TMR2IF	TMR1IF	0000 0000	0000 0000
0Dh	PIR2	—	—	—	—	—	—	—	CCP2IF	---- ---0	---- ---0
8Ch	PIE1	PSPIE(1)	ADIE	RCIE	TXIE	SSPIE	CCP1IE	TMR2IE	TMR1IE	0000 0000	0000 0000
8Dh	PIE2	—	—	—	—	—	—	—	CCP2IE	---- ---0	---- ---0
87h	TRISC	PORTC Data Direction Register								1111 1111	1111 1111
11h	TMR2	Timer2 module's register								0000 0000	0000 0000
92h	PR2	Timer2 module's period register								1111 1111	1111 1111
12h	T2CON	—	TOUTPS3	TOUTPS2	TOUTPS1	TOUTPS0	TMR2ON	T2CKPS1	T2CKPS0	-000 0000	-000 0000
15h	CCPR1L	Capture/Compare/PWM register1 (LSB)								xxxx xxxx	uuuu uuuu
16h	CCPR1H	Capture/Compare/PWM register1 (MSB)								xxxx xxxx	uuuu uuuu
17h	CCP1CON	—	—	CCP1X	CCP1Y	CCP1M3	CCP1M2	CCP1M1	CCP1M0	--00 0000	--00 0000
1Bh	CCPR2L	Capture/Compare/PWM register2 (LSB)								xxxx xxxx	uuuu uuuu
1Ch	CCPR2H	Capture/Compare/PWM register2 (MSB)								xxxx xxxx	uuuu uuuu
1Dh	CCP2CON	—	—	CCP2X	CCP2Y	CCP2M3	CCP2M2	CCP2M1	CCP2M0	--00 0000	--00 0000

Legend: x = unknown, u = unchanged, - = unimplemented read as '0'. Shaded cells are not used by PWM and Timer2.
Note 1: Bits PSPIE and PSPIF are reserved on the PIC16F73/76; always maintain these bits clear.

 © 2000 Microchip Technology Inc.

9.0 SYNCHRONOUS SERIAL PORT (SSP) MODULE

9.1 SSP Module Overview

The Synchronous Serial Port (SSP) module is a serial interface useful for communicating with other peripheral or microcontroller devices. These peripheral devices may be Serial EEPROMs, shift registers, display drivers, A/D converters, etc. The SSP module can operate in one of two modes:

- Serial Peripheral Interface (SPI)
- Inter-Integrated Circuit (I^2C)

An overview of I^2C operations and additional information on the SSP module can be found in the PICmicro™ Mid-Range MCU Family Reference Manual (DS33023).

Refer to Application Note AN578, *"Use of the SSP Module in the I^2C Multi-Master Environment."*

9.2 SPI Mode

This section contains register definitions and operational characteristics of the SPI module. Additional information on the SPI module can be found in the PICmicro™ Mid-Range MCU Family Reference Manual (DS33023A).

SPI mode allows 8 bits of data to be synchronously transmitted and received simultaneously. To accomplish communication, typically three pins are used:

- Serial Data Out (SDO) RC5/SDO
- Serial Data In (SDI) RC4/SDI/SDA
- Serial Clock (SCK) RC3/SCK/SCL

Additionally, a fourth pin may be used when in a Slave mode of operation:

- Slave Select ($\overline{SS}$) RA5/$\overline{SS}$/AN4

When initializing the SPI, several options need to be specified. This is done by programming the appropriate control bits in the SSPCON register (SSPCON<5:0>) and SSPSTAT<7:6>. These control bits allow the following to be specified:

- Master mode (SCK is the clock output)
- Slave mode (SCK is the clock input)
- Clock Polarity (Idle state of SCK)
- Clock edge (output data on rising/falling edge of SCK)
- Clock Rate (Master mode only)
- Slave Select mode (Slave mode only)

REGISTER 9-1: SSPSTAT: SYNC SERIAL PORT STATUS REGISTER (ADDRESS 94h)

R/W-0	R/W-0	R-0	R-0	R-0	R-0	R-0	R-0
SMP	CKE	D/$\overline{A}$	P	S	R/$\overline{W}$	UA	BF
bit 7							bit 0

bit 7 **SMP:** SPI Data Input Sample Phase

SPI Master mode:
1 = Input data sampled at end of data output time
0 = Input data sampled at middle of data output time (Microwire®)

SPI Slave mode:
SMP must be cleared when SPI is used in Slave mode

I^2C mode:
This bit must be maintained clear

bit 6 **CKE**: SPI Clock Edge Select (Figure 9-2, Figure 9-3, and Figure 9-4)

SPI mode:
CKP = 0
1 = Data transmitted on rising edge of SCK (Microwire® alternate)
0 = Data transmitted on falling edge of SCK

CKP = 1
1 = Data transmitted on falling edge of SCK (Microwire® default)
0 = Data transmitted on rising edge of SCK

I^2C mode:
This bit must be maintained clear

bit 5 **D/$\overline{A}$**: Data/$\overline{\text{Address}}$ bit (I^2C mode only)
1 = Indicates that the last byte received or transmitted was data
0 = Indicates that the last byte received or transmitted was address

bit 4 **P**: STOP bit (I^2C mode only)
This bit is cleared when the SSP module is disabled, or when the START bit is detected last. SSPEN is cleared.
1 = Indicates that a STOP bit has been detected last (this bit is ’0’ on RESET)
0 = STOP bit was not detected last

bit 3 **S**: START bit (I^2C mode only)
This bit is cleared when the SSP module is disabled, or when the STOP bit is detected last. SSPEN is cleared.
1 = Indicates that a START bit has been detected last (this bit is ’0’ on RESET)
0 = START bit was not detected last

bit 2 **R/$\overline{W}$**: Read/$\overline{\text{Write}}$ bit Information (I^2C mode only)
This bit holds the R/W bit information following the last address match. This bit is only valid from the address match to the next START bit, STOP bit, or $\overline{\text{ACK}}$ bit.
1 = Read
0 = Write

bit 1 **UA**: Update Address (10-bit I^2C mode only)
1 = Indicates that the user needs to update the address in the SSPADD register
0 = Address does not need to be updated

bit 0 **BF**: Buffer Full Status bit

Receive (SPI and I^2C modes):
1 = Receive complete, SSPBUF is full
0 = Receive not complete, SSPBUF is empty

Transmit (I^2C mode only):
1 = Transmit in progress, SSPBUF is full
0 = Transmit complete, SSPBUF is empty

Legend:			
R = Readable bit	W = Writable bit	U = Unimplemented bit, read as ‘0’	
- n = Value at POR reset	’1’ = Bit is set	’0’ = Bit is cleared	x = Bit is unknown

 © 2000 Microchip Technology Inc.

REGISTER 9-2: SSPCON: SYNC SERIAL PORT CONTROL REGISTER (ADDRESS 14h)

R/W-0	R/W-0	R/W-0	R/W-0	R/W-0	R/W-0	R/W-0	R/W-0
WCOL	SSPOV	SSPEN	CKP	SSPM3	SSPM2	SSPM1	SSPM0
bit 7							bit 0

bit 7 **WCOL**: Write Collision Detect bit
1 = The SSPBUF register is written while it is still transmitting the previous word (must be cleared in software)
0 = No collision

bit 6 **SSPOV**: Receive Overflow Indicator bit

In SPI mode:
1 = A new byte is received while the SSPBUF register is still holding the previous data. In case of overflow, the data in SSPSR is lost. Overflow can only occur in Slave mode. The user must read the SSPBUF, even if only transmitting data, to avoid setting overflow. In Master mode, the overflow bit is not set since each new reception (and transmission) is initiated by writing to the SSPBUF register.
0 = No overflow

In I^2C mode:
1 = A byte is received while the SSPBUF register is still holding the previous byte. SSPOV is a "don't care" in Transmit mode. SSPOV must be cleared in software in either mode.
0 = No overflow

bit 5 **SSPEN**: Synchronous Serial Port Enable bit

In SPI mode:
1 = Enables serial port and configures SCK, SDO, and SDI as serial port pins
0 = Disables serial port and configures these pins as I/O port pins

In I^2C mode:
1 = Enables the serial port and configures the SDA and SCL pins as serial port pins
0 = Disables serial port and configures these pins as I/O port pins

In both modes, when enabled, these pins must be properly configured as input or output.

bit 4 **CKP**: Clock Polarity Select bit

In SPI mode:
1 = Idle state for clock is a high level (Microwire® default)
0 = Idle state for clock is a low level (Microwire® alternate)

In I^2C mode:
SCK release control
1 = Enable clock
0 = Holds clock low (clock stretch). (Used to ensure data setup time.)

bit 3-0 **SSPM3:SSPM0**: Synchronous Serial Port Mode Select bits
0000 = SPI Master mode, clock = FOSC/4
0001 = SPI Master mode, clock = FOSC/16
0010 = SPI Master mode, clock = FOSC/64
0011 = SPI Master mode, clock = TMR2 output/2
0100 = SPI Slave mode, clock = SCK pin. $\overline{SS}$ pin control enabled.
0101 = SPI Slave mode, clock = SCK pin. $\overline{SS}$ pin control disabled. $\overline{SS}$ can be used as I/O pin.
0110 = I^2C Slave mode, 7-bit address
0111 = I^2C Slave mode, 10-bit address
1011 = I^2C firmware controlled Master mode (slave idle)
1110 = I^2C Slave mode, 7-bit address with START and STOP bit interrupts enabled
1111 = I^2C Slave mode, 10-bit address with START and STOP bit interrupts enabled

Legend:			
R = Readable bit	W = Writable bit	U = Unimplemented bit, read as '0'	
- n = Value at POR reset	'1' = Bit is set	'0' = Bit is cleared	x = Bit is unknown

FIGURE 9-1: SSP BLOCK DIAGRAM (SPI MODE)

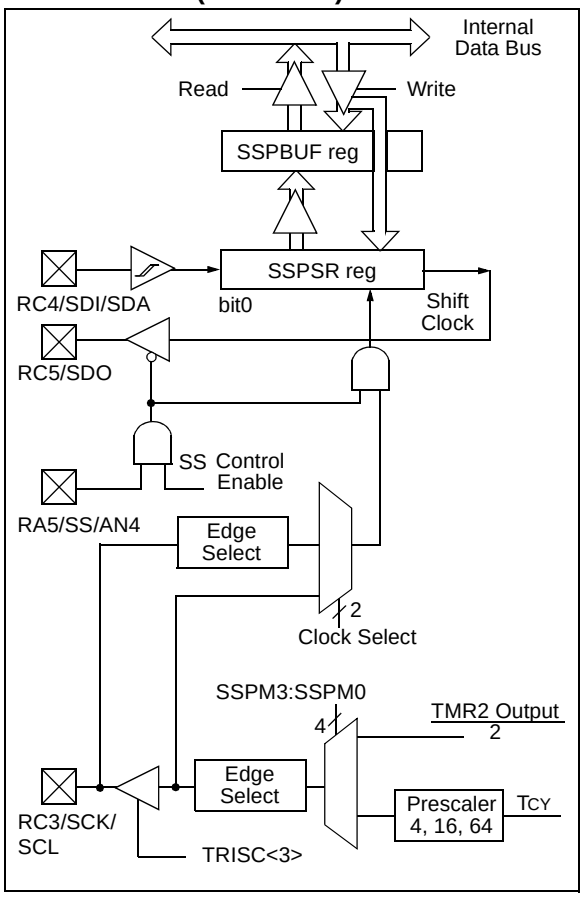

To enable the serial port, SSP enable bit, SSPEN (SSPCON<5>) must be set. To reset or reconfigure SPI mode, clear bit SSPEN, re-initialize the SSPCON register, and then set bit SSPEN. This configures the SDI, SDO, SCK, and $\overline{SS}$ pins as serial port pins. For the pins to behave as the serial port function, they must have their data direction bits (in the TRISC register) appropriately programmed. That is:

- SDI must have TRISC<4> set
- SDO must have TRISC<5> cleared
- SCK (Master mode) must have TRISC<3> cleared
- SCK (Slave mode) must have TRISC<3> set
- $\overline{SS}$ must have TRISA<5> set and ADCON must be configured such that RA5 is a digital I/O

.

Note 1:	When the SPI is in Slave mode with SS pin control enabled, (SSPCON<3:0> = `0100`) the SPI module will reset if the SS pin is set to VDD.
2:	If the SPI is used in Slave mode with CKE = '1', then the SS pin control must be enabled.

 © 2000 Microchip Technology Inc.

FIGURE 9-2: SPI MODE TIMING, MASTER MODE

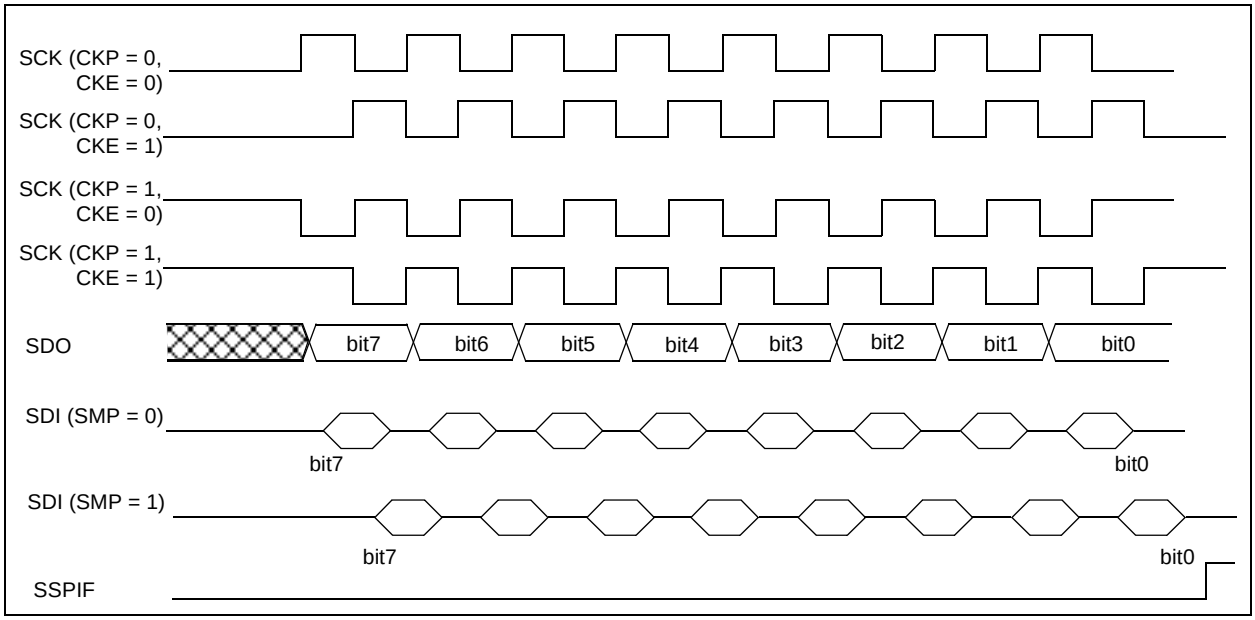

FIGURE 9-3: SPI MODE TIMING (SLAVE MODE WITH CKE = 0)

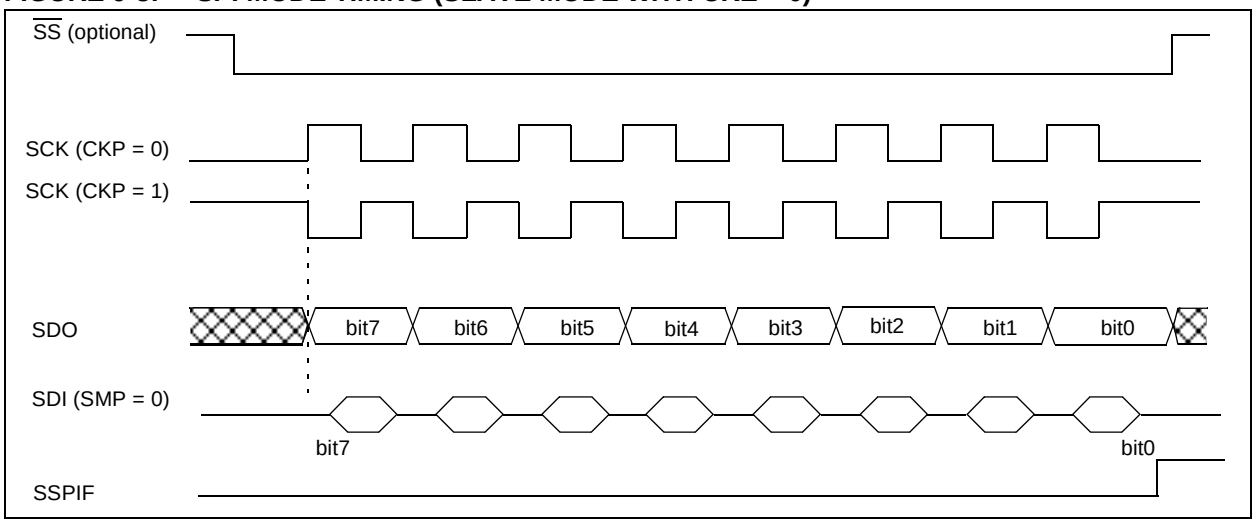

FIGURE 9-4: SPI MODE TIMING (SLAVE MODE WITH CKE = 1)

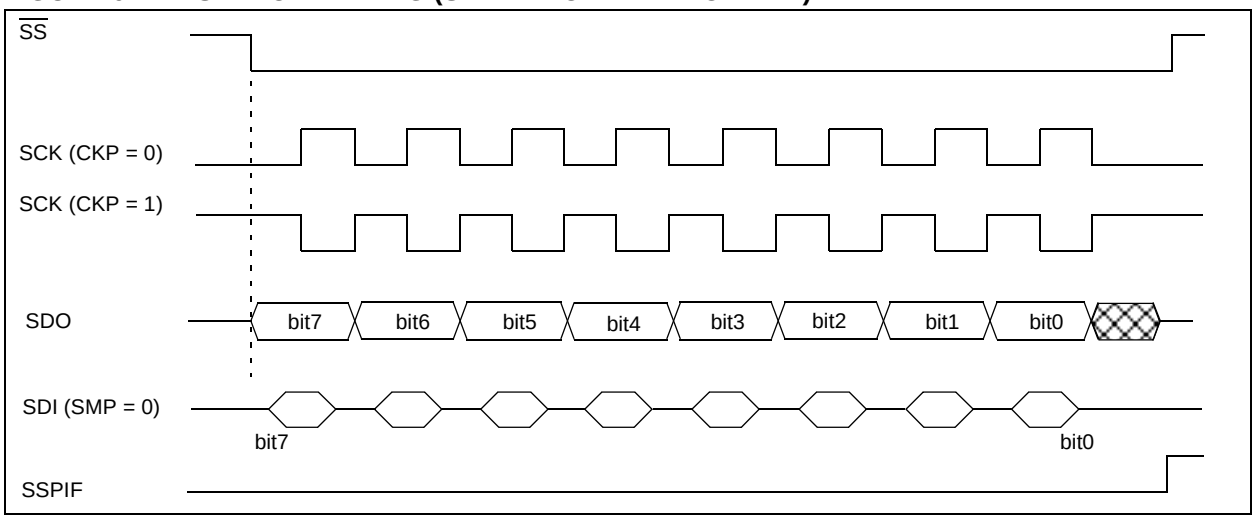

TABLE 9-1: REGISTERS ASSOCIATED WITH SPI OPERATION

Address	Name	Bit 7	Bit 6	Bit 5	Bit 4	Bit 3	Bit 2	Bit 1	Bit 0	Value on: POR, BOR	Value on all other RESETS
0Bh,8Bh. 10Bh,18Bh	INTCON	GIE	PEIE	T0IE	INTE	RBIE	T0IF	INTF	RBIF	0000 000x	0000 000u
0Ch	PIR1	PSPIF(1)	ADIF	RCIF	TXIF	SSPIF	CCP1IF	TMR2IF	TMR1IF	0000 0000	0000 0000
8Ch	PIE1	PSPIE(1)	ADIE	RCIE	TXIE	SSPIE	CCP1IE	TMR2IE	TMR1IE	0000 0000	0000 0000
87h	TRISC	PORTC Data Direction Register								1111 1111	1111 1111
13h	SSPBUF	Synchronous Serial Port Receive Buffer/Transmit Register								xxxx xxxx	uuuu uuuu
14h	SSPCON	WCOL	SSPOV	SSPEN	CKP	SSPM3	SSPM2	SSPM1	SSPM0	0000 0000	0000 0000
85h	TRISA	—	—	PORTA Data Direction Register						--11 1111	--11 1111
94h	SSPSTAT	SMP	CKE	D/$\overline{A}$	P	S	R/$\overline{W}$	UA	BF	0000 0000	0000 0000

Legend: x = unknown, u = unchanged, - = unimplemented read as '0'. Shaded cells are not used by the SSP in SPI mode.

Note 1: Bits PSPIE and PSPIF are reserved on the PIC16F73/76; always maintain these bits clear.

 © 2000 Microchip Technology Inc.

9.3 SSP I²C Operation

The SSP module in I²C mode, fully implements all slave functions, except general call support, and provides interrupts on START and STOP bits in hardware to facilitate firmware implementations of the master functions. The SSP module implements the standard mode specifications as well as 7-bit and 10-bit addressing.

Two pins are used for data transfer. These are the RC3/SCK/SCL pin, which is the clock (SCL), and the RC4/SDI/SDA pin, which is the data (SDA). The user must configure these pins as inputs or outputs through the TRISC<4:3> bits.

The SSP module functions are enabled by setting SSP enable bit SSPEN (SSPCON<5>).

FIGURE 9-5: SSP BLOCK DIAGRAM (I²C MODE)

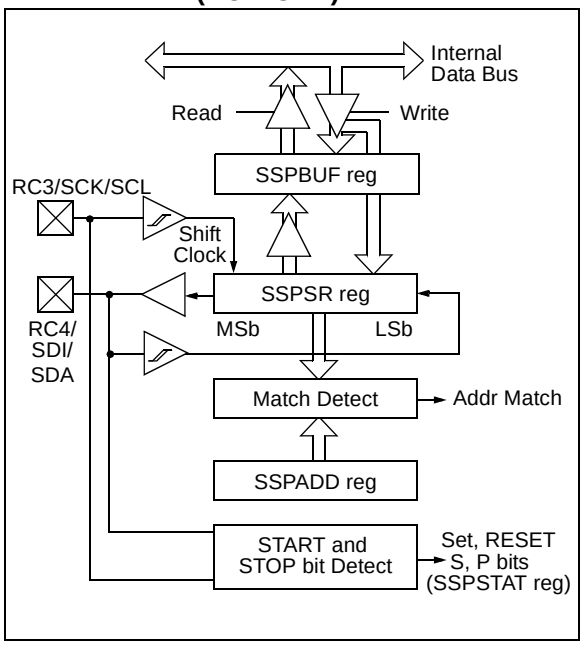

The SSP module has five registers for I²C operation. These are the:

- SSP Control Register (SSPCON)
- SSP Status Register (SSPSTAT)
- Serial Receive/Transmit Buffer (SSPBUF)
- SSP Shift Register (SSPSR) - Not directly accessible
- SSP Address Register (SSPADD)

The SSPCON register allows control of the I²C operation. Four mode selection bits (SSPCON<3:0>) allow one of the following I²C modes to be selected:

- I²C Slave mode (7-bit address)
- I²C Slave mode (10-bit address)
- I²C Slave mode (7-bit address), with START and STOP bit interrupts enabled to support firmware Master mode
- I²C Slave mode (10-bit address), with START and STOP bit interrupts enabled to support firmware Master mode
- I²C START and STOP bit interrupts enabled to support firmware Master mode, Slave is idle

Selection of any I²C mode, with the SSPEN bit set, forces the SCL and SDA pins to be open drain, provided these pins are programmed to inputs by setting the appropriate TRISC bits. Pull-up resistors must be provided externally to the SCL and SDA pins for proper operation of the I²C module.

Additional information on SSP I²C operation can be found in the PICmicro™ Mid-Range MCU Family Reference Manual (DS33023A).

9.3.1 SLAVE MODE

In Slave mode, the SCL and SDA pins must be configured as inputs (TRISC<4:3> set). The SSP module will override the input state with the output data when required (slave-transmitter).

When an address is matched, or the data transfer after an address match is received, the hardware automatically will generate the acknowledge ($\overline{\text{ACK}}$) pulse, and then load the SSPBUF register with the received value currently in the SSPSR register.

There are certain conditions that will cause the SSP module not to give this $\overline{\text{ACK}}$ pulse. They include (either or both):

a) The buffer full bit BF (SSPSTAT<0>) was set before the transfer was received.

b) The overflow bit SSPOV (SSPCON<6>) was set before the transfer was received.

In this case, the SSPSR register value is not loaded into the SSPBUF, but bit SSPIF (PIR1<3>) is set. Table 9-2 shows what happens when a data transfer byte is received, given the status of bits BF and SSPOV. The shaded cells show the condition where user software did not properly clear the overflow condition. Flag bit BF is cleared by reading the SSPBUF register while bit SSPOV is cleared through software.

The SCL clock input must have a minimum high and low for proper operation. The high and low times of the I²C specification, as well as the requirements of the SSP module, are shown in timing parameter #100 and parameter #101.

9.3.1.1 Addressing

Once the SSP module has been enabled, it waits for a START condition to occur. Following the START condition, the 8-bits are shifted into the SSPSR register. All incoming bits are sampled with the rising edge of the clock (SCL) line. The value of register SSPSR<7:1> is compared to the value of the SSPADD register. The address is compared on the falling edge of the eighth clock (SCL) pulse. If the addresses match, and the BF and SSPOV bits are clear, the following events occur:

a) The SSPSR register value is loaded into the SSPBUF register.
b) The buffer full bit, BF is set.
c) An $\overline{\text{ACK}}$ pulse is generated.
d) SSP interrupt flag bit, SSPIF (PIR1<3>) is set (interrupt is generated if enabled) - on the falling edge of the ninth SCL pulse.

In 10-bit address mode, two address bytes need to be received by the slave (Figure 9-7). The five Most Significant bits (MSbs) of the first address byte specify if this is a 10-bit address. Bit R/$\overline{\text{W}}$ (SSPSTAT<2>) must specify a write so the slave device will receive the second address byte. For a 10-bit address, the first byte would equal '`1111 0 A9 A8 0`', where `A9` and `A8` are the two MSbs of the address. The sequence of events for 10-bit address is as follows, with steps 7 - 9 for slave-transmitter:

1. Receive first (high) byte of address (bits SSPIF, BF, and bit UA (SSPSTAT<1>) are set).
2. Update the SSPADD register with second (low) byte of address (clears bit UA and releases the SCL line).
3. Read the SSPBUF register (clears bit BF) and clear flag bit SSPIF.
4. Receive second (low) byte of address (bits SSPIF, BF, and UA are set).
5. Update the SSPADD register with the first (high) byte of address, if match releases SCL line, this will clear bit UA.
6. Read the SSPBUF register (clears bit BF) and clear flag bit SSPIF.
7. Receive Repeated START condition.
8. Receive first (high) byte of address (bits SSPIF and BF are set).
9. Read the SSPBUF register (clears bit BF) and clear flag bit SSPIF.

TABLE 9-2: DATA TRANSFER RECEIVED BYTE ACTIONS

Status Bits as Data Transfer is Received		SSPSR → SSPBUF	Generate $\overline{\text{ACK}}$ Pulse	Set bit SSPIF (SSP Interrupt occurs if enabled)
BF	SSPOV			
0	0	Yes	Yes	Yes
1	0	No	No	Yes
1	1	No	No	Yes
0	1	No	No	Yes

Note: Shaded cells show the conditions where the user software did not properly clear the overflow condition.

 © 2000 Microchip Technology Inc.

9.3.1.2 Reception

When the R/$\overline{W}$ bit of the address byte is clear and an address match occurs, the R/$\overline{W}$ bit of the SSPSTAT register is cleared. The received address is loaded into the SSPBUF register.

When the address byte overflow condition exists, then no Acknowledge ($\overline{ACK}$) pulse is given. An overflow condition is defined as either bit BF (SSPSTAT<0>) is set, or bit SSPOV (SSPCON<6>) is set. This is an error condition due to the user's firmware.

An SSP interrupt is generated for each data transfer byte. Flag bit SSPIF (PIR1<3>) must be cleared in software. The SSPSTAT register is used to determine the status of the byte.

FIGURE 9-6: I^{2}C WAVEFORMS FOR RECEPTION (7-BIT ADDRESS)

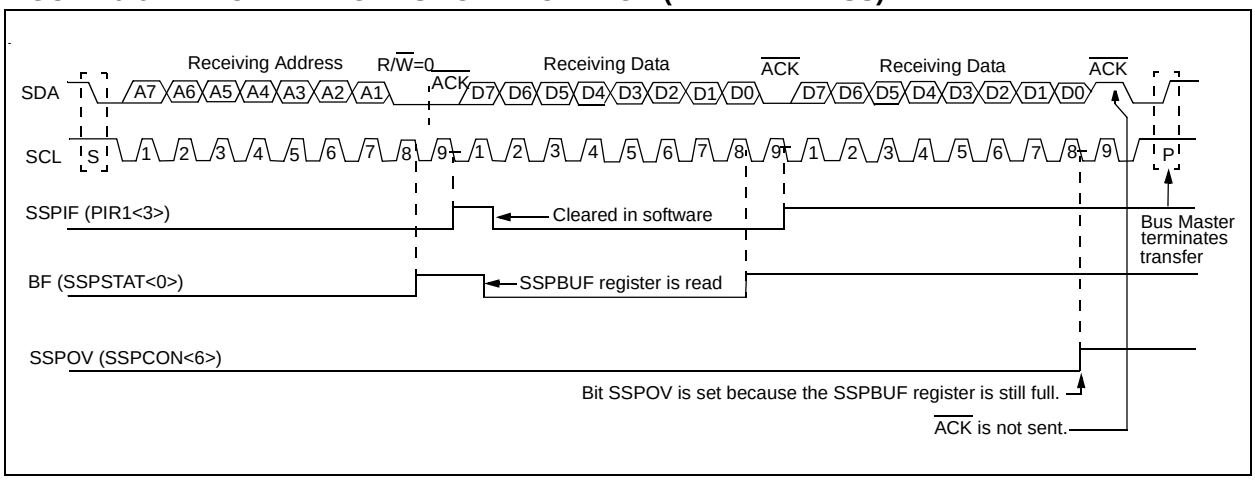

9.3.1.3 Transmission

When the R/$\overline{W}$ bit of the incoming address byte is set and an address match occurs, the R/$\overline{W}$ bit of the SSPSTAT register is set. The received address is loaded into the SSPBUF register. The $\overline{ACK}$ pulse will be sent on the ninth bit, and pin RC3/SCK/SCL is held low. The transmit data must be loaded into the SSPBUF register, which also loads the SSPSR register. Then, pin RC3/SCK/SCL should be enabled by setting bit CKP (SSPCON<4>). The master must monitor the SCL pin prior to asserting another clock pulse. The slave devices may be holding off the master by stretching the clock. The eight data bits are shifted out on the falling edge of the SCL input. This ensures that the SDA signal is valid during the SCL high time (Figure 9-7).

An SSP interrupt is generated for each data transfer byte. Flag bit SSPIF must be cleared in software, and the SSPSTAT register is used to determine the status of the byte. Flag bit SSPIF is set on the falling edge of the ninth clock pulse.

As a slave-transmitter, the $\overline{ACK}$ pulse from the master-receiver is latched on the rising edge of the ninth SCL input pulse. If the SDA line was high (not $\overline{ACK}$), then the data transfer is complete. When the $\overline{ACK}$ is latched by the slave, the slave logic is reset (resets SSPSTAT register) and the slave then monitors for another occurrence of the START bit. If the SDA line was low ($\overline{ACK}$), the transmit data must be loaded into the SSPBUF register, which also loads the SSPSR register. Then pin RC3/SCK/SCL should be enabled by setting bit CKP.

FIGURE 9-7: I²C WAVEFORMS FOR TRANSMISSION (7-BIT ADDRESS)

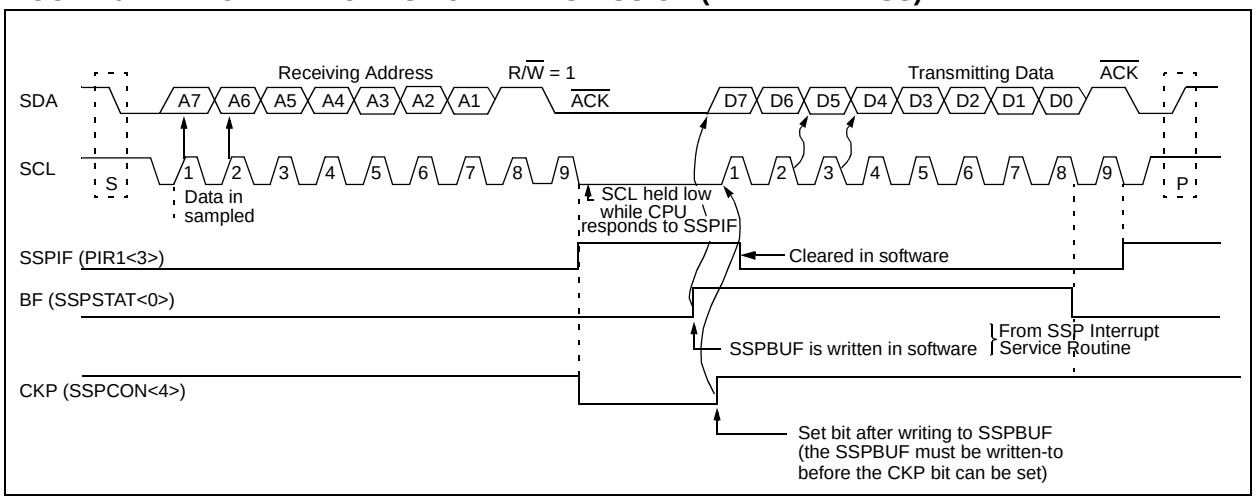

 © 2000 Microchip Technology Inc.

9.3.2 MASTER MODE

Master mode of operation is supported in firmware using interrupt generation on the detection of the START and STOP conditions. The STOP (P) and START (S) bits are cleared from a RESET or when the SSP module is disabled. The STOP (P) and START (S) bits will toggle based on the START and STOP conditions. Control of the I^2C bus may be taken when the P bit is set, or the bus is idle and both the S and P bits are clear.

In Master mode, the SCL and SDA lines are manipulated by clearing the corresponding TRISC<4:3> bit(s). The output level is always low, irrespective of the value(s) in PORTC<4:3>. So when transmitting data, a '1' data bit must have the TRISC<4> bit set (input) and a '0' data bit must have the TRISC<4> bit cleared (output). The same scenario is true for the SCL line with the TRISC<3> bit. Pull-up resistors must be provided externally to the SCL and SDA pins for proper operation of the I^2C module.

The following events will cause SSP Interrupt Flag bit, SSPIF, to be set (SSP Interrupt will occur if enabled):

- START condition
- STOP condition
- Data transfer byte transmitted/received

Master mode of operation can be done with either the Slave mode idle (SSPM3:SSPM0 = `1011`), or with the Slave active. When both Master and Slave modes are enabled, the software needs to differentiate the source(s) of the interrupt.

9.3.3 MULTI-MASTER MODE

In Multi-Master mode, the interrupt generation on the detection of the START and STOP conditions, allows the determination of when the bus is free. The STOP (P) and START (S) bits are cleared from a RESET or when the SSP module is disabled. The STOP (P) and START (S) bits will toggle based on the START and STOP conditions. Control of the I^2C bus may be taken when bit P (SSPSTAT<4>) is set, or the bus is idle and both the S and P bits clear. When the bus is busy, enabling the SSP Interrupt will generate the interrupt when the STOP condition occurs.

In Multi-Master operation, the SDA line must be monitored to see if the signal level is the expected output level. This check only needs to be done when a high level is output. If a high level is expected and a low level is present, the device needs to release the SDA and SCL lines (set TRISC<4:3>). There are two stages where this arbitration can be lost, these are:

- Address Transfer
- Data Transfer

When the slave logic is enabled, the slave continues to receive. If arbitration was lost during the address transfer stage, communication to the device may be in progress. If addressed, an $\overline{ACK}$ pulse will be generated. If arbitration was lost during the data transfer stage, the device will need to re-transfer the data at a later time.

TABLE 9-3: REGISTERS ASSOCIATED WITH I^2C OPERATION

Address	Name	Bit 7	Bit 6	Bit 5	Bit 4	Bit 3	Bit 2	Bit 1	Bit 0	Value on: POR, BOR	Value on all other RESETS
0Bh, 8Bh, 10Bh,18Bh	INTCON	GIE	PEIE	T0IE	INTE	RBIE	T0IF	INTF	RBIF	`0000 000x`	`0000 000u`
0Ch	PIR1	PSPIF(1)	ADIF	RCIF	TXIF	SSPIF	CCP1IF	TMR2IF	TMR1IF	`0000 0000`	`0000 0000`
8Ch	PIE1	PSPIE(1)	ADIE	RCIE	TXIE	SSPIE	CCP1IE	TMR2IE	TMR1IE	`0000 0000`	`0000 0000`
13h	SSPBUF	Synchronous Serial Port Receive Buffer/Transmit Register								`xxxx xxxx`	`uuuu uuuu`
93h	SSPADD	Synchronous Serial Port (I^2C mode) Address Register								`0000 0000`	`0000 0000`
14h	SSPCON	WCOL	SSPOV	SSPEN	CKP	SSPM3	SSPM2	SSPM1	SSPM0	`0000 0000`	`0000 0000`
94h	SSPSTAT	SMP(2)	CKE(2)	D/$\overline{A}$	P	S	R/$\overline{W}$	UA	BF	`0000 0000`	`0000 0000`
87h	TRISC	PORTC Data Direction register								`1111 1111`	`1111 1111`

Legend: `x` = unknown, `u` = unchanged, `-` = unimplemented locations read as '0'. Shaded cells are not used by SSP module in I^2C mode.

Note 1: PSPIF and PSPIE are reserved on the PIC16F73/76; always maintain these bits clear.

2: Maintain these bits clear in I^2C mode.

NOTES:

 © 2000 Microchip Technology Inc.

10.0 UNIVERSAL SYNCHRONOUS ASYNCHRONOUS RECEIVER TRANSMITTER (USART)

The Universal Synchronous Asynchronous Receiver Transmitter (USART) module is one of the two serial I/O modules. (USART is also known as a Serial Communications Interface or SCI.) The USART can be configured as a full duplex asynchronous system that can communicate with peripheral devices, such as CRT terminals and personal computers, or it can be configured as a half duplex synchronous system that can communicate with peripheral devices, such as A/D or D/A integrated circuits, serial EEPROMs, etc.

The USART can be configured in the following modes:

- Asynchronous (full duplex)
- Synchronous - Master (half duplex)
- Synchronous - Slave (half duplex)

Bit SPEN (RCSTA<7>) and bits TRISC<7:6> have to be set in order to configure pins RC6/TX/CK and RC7/RX/DT as the Universal Synchronous Asynchronous Receiver Transmitter.

REGISTER 10-1: TXSTA: TRANSMIT STATUS AND CONTROL REGISTER (ADDRESS 98h)

R/W-0	R/W-0	R/W-0	R/W-0	U-0	R/W-0	R-1	R/W-0
CSRC	TX9	TXEN	SYNC	—	BRGH	TRMT	TX9D
bit 7							bit 0

bit 7 **CSRC:** Clock Source Select bit

Asynchronous mode:
Don't care

Synchronous mode:
1 = Master mode (Clock generated internally from BRG)
0 = Slave mode (Clock from external source)

bit 6 **TX9**: 9-bit Transmit Enable bit
1 = Selects 9-bit transmission
0 = Selects 8-bit transmission

bit 5 **TXEN**: Transmit Enable bit
1 = Transmit enabled
0 = Transmit disabled

Note: SREN/CREN overrides TXEN in SYNC mode.

bit 4 **SYNC**: USART Mode Select bit
1 = Synchronous mode
0 = Asynchronous mode

bit 3 **Unimplemented:** Read as '0'

bit 2 **BRGH**: High Baud Rate Select bit

Asynchronous mode:
1 = High speed
0 = Low speed

Synchronous mode:
Unused in this mode

bit 1 **TRMT**: Transmit Shift Register Status bit
1 = TSR empty
0 = TSR full

bit 0 **TX9D:** 9th bit of transmit data. Can be parity bit.

Legend:			
R = Readable bit	W = Writable bit	U = Unimplemented bit, read as '0'	
- n = Value at POR reset	'1' = Bit is set	'0' = Bit is cleared	x = Bit is unknown

REGISTER 10-2: RCSTA: RECEIVE STATUS AND CONTROL REGISTER (ADDRESS 18h)

R/W-0	R/W-0	R/W-0	R/W-0	U-0	R-0	R-0	R-x
SPEN	RX9	SREN	CREN	—	FERR	OERR	RX9D
bit 7							bit 0

bit 7 **SPEN:** Serial Port Enable bit
1 = Serial port enabled (Configures RC7/RX/DT and RC6/TX/CK pins as serial port pins)
0 = Serial port disabled

bit 6 **RX9**: 9-bit Receive Enable bit
1 = Selects 9-bit reception
0 = Selects 8-bit reception

bit 5 **SREN**: Single Receive Enable bit

Asynchronous mode:
Don't care

Synchronous mode - Master:
1 = Enables single receive
0 = Disables single receive
This bit is cleared after reception is complete.

Synchronous mode - Slave:
Don't care

bit 4 **CREN**: Continuous Receive Enable bit

Asynchronous mode:
1 = Enables continuous receive
0 = Disables continuous receive

Synchronous mode:
1 = Enables continuous receive until enable bit CREN is cleared (CREN overrides SREN)
0 = Disables continuous receive

bit 3 **Unimplemented:** Read as '0'

bit 2 **FERR**: Framing Error bit
1 = Framing error (Can be updated by reading RCREG register and receive next valid byte)
0 = No framing error

bit 1 **OERR**: Overrun Error bit
1 = Overrun error (Can be cleared by clearing bit CREN)
0 = No overrun error

bit 0 **RX9D:** 9th bit of Received Data
Can be parity bit (parity to be calculated by firmware)

Legend:			
R = Readable bit	W = Writable bit	U = Unimplemented bit, read as '0'	
- n = Value at POR reset	'1' = Bit is set	'0' = Bit is cleared	x = Bit is unknown

 © 2000 Microchip Technology Inc.

10.1 USART Baud Rate Generator (BRG)

The BRG supports both the Asynchronous and Synchronous modes of the USART. It is a dedicated 8-bit baud rate generator. The SPBRG register controls the period of a free running 8-bit timer. In Asynchronous mode, bit BRGH (TXSTA<2>) also controls the baud rate. In Synchronous mode, bit BRGH is ignored. Table 10-1 shows the formula for computation of the baud rate for different USART modes which only apply in Master mode (internal clock).

Given the desired baud rate and Fosc, the nearest integer value for the SPBRG register can be calculated using the formula in Table 10-1. From this, the error in baud rate can be determined.

It may be advantageous to use the high baud rate (BRGH = 1), even for slower baud clocks. This is because the FOSC/(16(X + 1)) equation can reduce the baud rate error in some cases.

Writing a new value to the SPBRG register causes the BRG timer to be reset (or cleared). This ensures the BRG does not wait for a timer overflow before outputting the new baud rate.

10.1.1 SAMPLING

The data on the RC7/RX/DT pin is sampled three times by a majority detect circuit to determine if a high or a low level is present at the RX pin.

TABLE 10-1: BAUD RATE FORMULA

SYNC	BRGH = 0 (Low Speed)	BRGH = 1 (High Speed)
0	(Asynchronous) Baud Rate = FOSC/(64(X+1))	Baud Rate= FOSC/(16(X+1))
1	(Synchronous) Baud Rate = FOSC/(4(X+1))	N/A

X = value in SPBRG (0 to 255)

TABLE 10-2: REGISTERS ASSOCIATED WITH BAUD RATE GENERATOR

Address	Name	Bit 7	Bit 6	Bit 5	Bit 4	Bit 3	Bit 2	Bit 1	Bit 0	Value on: POR, BOR	Value on all other RESETS
98h	TXSTA	CSRC	TX9	TXEN	SYNC	—	BRGH	TRMT	TX9D	0000 -010	0000 -010
18h	RCSTA	SPEN	RX9	SREN	CREN	—	FERR	OERR	RX9D	0000 -00x	0000 -00x
99h	SPBRG	Baud Rate Generator Register								0000 0000	0000 0000

Legend: x = unknown, - = unimplemented read as '0'. Shaded cells are not used by the BRG.

TABLE 10-3: BAUD RATES FOR ASYNCHRONOUS MODE (BRGH = 0)

BAUD RATE (K)	Fosc = 20 MHz			Fosc = 16 MHz			Fosc = 10 MHz		
	KBAUD	% ERROR	SPBRG VALUE (DECIMAL)	KBAUD	% ERROR	SPBRG VALUE (DECIMAL)	KBAUD	% ERROR	SPBRG VALUE (DECIMAL)
0.3	-	-	-	-	-	-	-	-	-
1.2	1.221	1.75	255	1.202	0.17	207	1.202	0.17	129
2.4	2.404	0.17	129	2.404	0.17	103	2.404	0.17	64
9.6	9.766	1.73	31	9.615	0.16	25	9.766	1.73	15
19.2	19.531	1.72	15	19.231	0.16	12	19.531	1.72	7
28.8	31.250	8.51	9	27.778	3.55	8	31.250	8.51	4
33.6	34.722	3.34	8	35.714	6.29	6	31.250	6.99	4
57.6	62.500	8.51	4	62.500	8.51	3	52.083	9.58	2
HIGH	1.221	-	255	0.977	-	255	0.610	-	255
LOW	312.500	-	0	250.000	-	0	156.250	-	0

BAUD RATE (K)	Fosc = 4 MHz			Fosc = 3.6864 MHz		
	KBAUD	% ERROR	SPBRG VALUE (DECIMAL)	KBAUD	% ERROR	SPBRG VALUE (DECIMAL)
0.3	0.300	0	207	0.301	0.33	185
1.2	1.202	0.17	51	1.216	1.33	46
2.4	2.404	0.17	25	2.432	1.33	22
9.6	8.929	6.99	6	9.322	2.90	5
19.2	20.833	8.51	2	18.643	2.90	2
28.8	31.250	8.51	1	-	-	-
33.6	-	-	-	-	-	-
57.6	62.500	8.51	0	55.930	2.90	0
HIGH	0.244	-	255	0.218	-	255
LOW	62.500	-	0	55.930	-	0

-

TABLE 10-4: BAUD RATES FOR ASYNCHRONOUS MODE (BRGH = 1)

BAUD RATE (K)	Fosc = 20 MHz			Fosc = 16 MHz			Fosc = 10 MHz		
	KBAUD	% ERROR	SPBRG VALUE (DECIMAL)	KBAUD	% ERROR	SPBRG VALUE (DECIMAL)	KBAUD	% ERROR	SPBRG VALUE (DECIMAL)
0.3	-	-	-	-	-	-	-	-	-
1.2	-	-	-	-	-	-	-	-	-
2.4	-	-	-	-	-	-	2.441	1.71	255
9.6	9.615	0.16	129	9.615	0.16	103	9.615	0.16	64
19.2	19.231	0.16	64	19.231	0.16	51	19.531	1.72	31
28.8	29.070	0.94	42	29.412	2.13	33	28.409	1.36	21
33.6	33.784	0.55	36	33.333	0.79	29	32.895	2.10	18
57.6	59.524	3.34	20	58.824	2.13	16	56.818	1.36	10
HIGH	4.883	-	255	3.906	-	255	2.441	-	255
LOW	1250.000	-	0	1000.000		0	625.000	-	0

BAUD RATE (K)	Fosc = 4 MHz			Fosc = 3.6864 MHz		
	KBAUD	% ERROR	SPBRG VALUE (DECIMAL)	KBAUD	% ERROR	SPBRG VALUE (DECIMAL)
0.3	-	-	-	-	-	-
1.2	1.202	0.17	207	1.203	0.25	185
2.4	2.404	0.17	103	2.406	0.25	92
9.6	9.615	0.16	25	9.727	1.32	22
19.2	19.231	0.16	12	18.643	2.90	11
28.8	27.798	3.55	8	27.965	2.90	7
33.6	35.714	6.29	6	31.960	4.88	6
57.6	62.500	8.51	3	55.930	2.90	3
HIGH	0.977	-	255	0.874	-	255
LOW	250.000	-	0	273.722	-	0

 © 2000 Microchip Technology Inc.

10.2 USART Asynchronous Mode

In this mode, the USART uses standard non-return-to-zero (NRZ) format (one START bit, eight or nine data bits, and one STOP bit). The most common data format is 8-bits. An on-chip, dedicated, 8-bit baud rate generator can be used to derive standard baud rate frequencies from the oscillator. The USART transmits and receives the LSb first. The USART's transmitter and receiver are functionally independent, but use the same data format and baud rate. The baud rate generator produces a clock either x16 or x64 of the bit shift rate, depending on bit BRGH (TXSTA<2>). Parity is not supported by the hardware, but can be implemented in software (and stored as the ninth data bit). Asynchronous mode is stopped during SLEEP.

Asynchronous mode is selected by clearing bit SYNC (TXSTA<4>).

The USART Asynchronous module consists of the following important elements:

- Baud Rate Generator
- Sampling Circuit
- Asynchronous Transmitter
- Asynchronous Receiver

10.2.1 USART ASYNCHRONOUS TRANSMITTER

The USART transmitter block diagram is shown in Figure 10-1. The heart of the transmitter is the transmit (serial) shift register (TSR). The shift register obtains its data from the read/write transmit buffer, TXREG. The TXREG register is loaded with data in software. The TSR register is not loaded until the STOP bit has been transmitted from the previous load. As soon as the STOP bit is transmitted, the TSR is loaded with new data from the TXREG register (if available). Once the TXREG register transfers the data to the TSR register (occurs in one T_{CY}), the TXREG register is empty and flag bit TXIF (PIR1<4>) is set. This interrupt can be enabled/disabled by setting/clearing enable bit TXIE (PIE1<4>). Flag bit TXIF will be set, regardless of the state of enable bit TXIE and cannot be cleared in software. It will reset only when new data is loaded into the TXREG register. While flag bit TXIF indicates the status of the TXREG register, another bit TRMT (TXSTA<1>) shows the status of the TSR register. Status bit TRMT is a read only bit, which is set when the TSR register is empty. No interrupt logic is tied to this bit, so the user has to poll this bit in order to determine if the TSR register is empty.

> **Note 1:** The TSR register is not mapped in data memory, so it is not available to the user.
>
> **2:** Flag bit TXIF is set when enable bit TXEN is set. TXIF is cleared by loading TXREG.

Transmission is enabled by setting enable bit TXEN (TXSTA<5>). The actual transmission will not occur until the TXREG register has been loaded with data and the baud rate generator (BRG) has produced a shift clock (Figure 10-2). The transmission can also be started by first loading the TXREG register and then setting enable bit TXEN. Normally, when transmission is first started, the TSR register is empty. At that point, transfer to the TXREG register will result in an immediate transfer to TSR, resulting in an empty TXREG. A back-to-back transfer is thus possible (Figure 10-3). Clearing enable bit TXEN during a transmission will cause the transmission to be aborted and will reset the transmitter. As a result, the RC6/TX/CK pin will revert to hi-impedance.

In order to select 9-bit transmission, transmit bit TX9 (TXSTA<6>) should be set and the ninth bit should be written to TX9D (TXSTA<0>). The ninth bit must be written before writing the 8-bit data to the TXREG register. This is because a data write to the TXREG register can result in an immediate transfer of the data to the TSR register (if the TSR is empty). In such a case, an incorrect ninth data bit may be loaded in the TSR register.

FIGURE 10-1: USART TRANSMIT BLOCK DIAGRAM

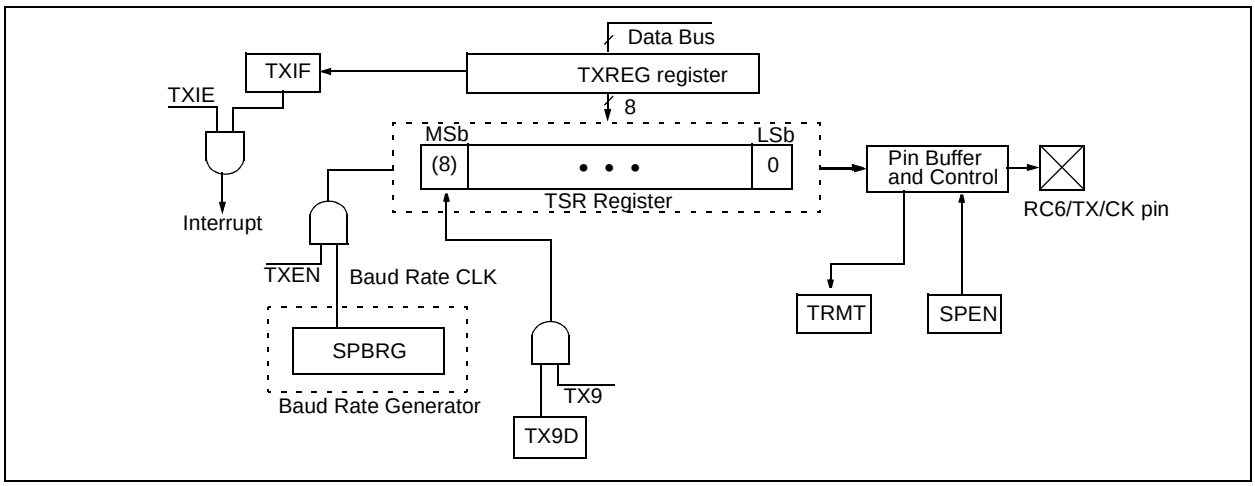

Steps to follow when setting up an Asynchronous Transmission:

1. Initialize the SPBRG register for the appropriate baud rate. If a high speed baud rate is desired, set bit BRGH. (Section 10.1)
2. Enable the asynchronous serial port by clearing bit SYNC and setting bit SPEN.
3. If interrupts are desired, then set enable bit TXIE.
4. If 9-bit transmission is desired, then set transmit bit TX9.
5. Enable the transmission by setting bit TXEN, which will also set bit TXIF.
6. If 9-bit transmission is selected, the ninth bit should be loaded in bit TX9D.
7. Load data to the TXREG register (starts transmission).
8. If using interrupts, ensure that GIE and PIE in the INTCON register are set.

FIGURE 10-2: ASYNCHRONOUS MASTER TRANSMISSION

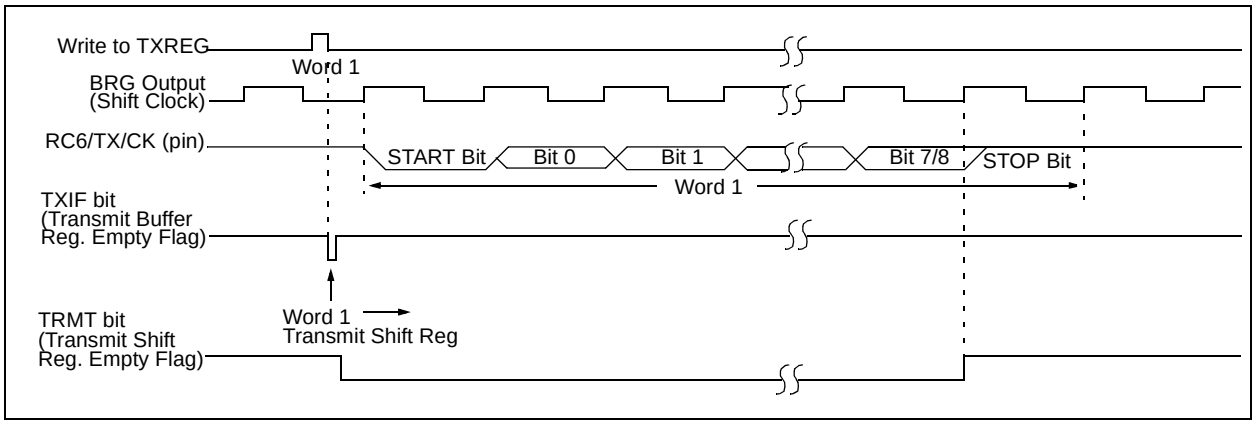

FIGURE 10-3: ASYNCHRONOUS MASTER TRANSMISSION (BACK TO BACK)

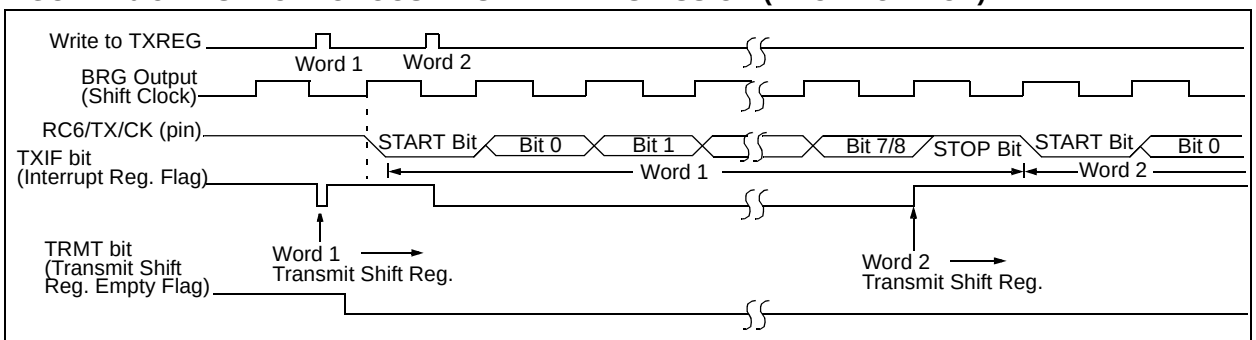

Note: This timing diagram shows two consecutive transmissions.

TABLE 10-5: REGISTERS ASSOCIATED WITH ASYNCHRONOUS TRANSMISSION

Address	Name	Bit 7	Bit 6	Bit 5	Bit 4	Bit 3	Bit 2	Bit 1	Bit 0	Value on: POR, BOR	Value on all other RESETS
0Bh, 8Bh, 10Bh,18Bh	INTCON	GIE	PEIE	T0IE	INTE	RBIE	T0IF	INTF	RBIF	0000 000x	0000 000u
0Ch	PIR1	PSPIF(1)	ADIF	RCIF	TXIF	SSPIF	CCP1IF	TMR2IF	TMR1IF	0000 0000	0000 0000
18h	RCSTA	SPEN	RX9	SREN	CREN	—	FERR	OERR	RX9D	0000 -00x	0000 -00x
19h	TXREG	USART Transmit Register								0000 0000	0000 0000
8Ch	PIE1	PSPIE(1)	ADIE	RCIE	TXIE	SSPIE	CCP1IE	TMR2IE	TMR1IE	0000 0000	0000 0000
98h	TXSTA	CSRC	TX9	TXEN	SYNC	—	BRGH	TRMT	TX9D	0000 -010	0000 -010
99h	SPBRG	Baud Rate Generator Register								0000 0000	0000 0000

Legend: x = unknown, - = unimplemented locations read as '0'. Shaded cells are not used for asynchronous transmission.
Note 1: Bits PSPIE and PSPIF are reserved on the PIC16F73/76; always maintain these bits clear.

 © 2000 Microchip Technology Inc.

10.2.2 USART ASYNCHRONOUS RECEIVER

The receiver block diagram is shown in Figure 10-4. The data is received on the RC7/RX/DT pin and drives the data recovery block. The data recovery block is actually a high speed shifter operating at x16 times the baud rate, whereas the main receive serial shifter operates at the bit rate, or at FOSC.

Once Asynchronous mode is selected, reception is enabled by setting bit CREN (RCSTA<4>).

The heart of the receiver is the receive (serial) shift register (RSR). After sampling the STOP bit, the received data in the RSR is transferred to the RCREG register (if it is empty). If the transfer is complete, flag bit RCIF (PIR1<5>) is set. The actual interrupt can be enabled/disabled by setting/clearing enable bit RCIE (PIE1<5>). Flag bit RCIF is a read only bit which is cleared by the hardware. It is cleared when the RCREG register has been read and is empty. The RCREG is a double buffered register (i.e., it is a two deep FIFO). It is possible for two bytes of data to be received and transferred to the RCREG FIFO and a third byte to begin shifting to the RSR register. On the detection of the STOP bit of the third byte, if the RCREG register is still full, the overrun error bit OERR (RCSTA<1>) will be set. The word in the RSR will be lost. The RCREG register can be read twice to retrieve the two bytes in the FIFO. Overrun bit OERR has to be cleared in software. This is done by resetting the receive logic (CREN is cleared and then set). If bit OERR is set, transfers from the RSR register to the RCREG register are inhibited and no further data will be received, therefore, it is essential to clear error bit OERR if it is set. Framing error bit FERR (RCSTA<2>) is set if a STOP bit is detected as clear. Bit FERR and the 9th receive bit are buffered the same way as the receive data. Reading the RCREG will load bits RX9D and FERR with new values, therefore, it is essential for the user to read the RCSTA register <u>before</u> reading RCREG register, in order not to lose the old FERR and RX9D information.

FIGURE 10-4: USART RECEIVE BLOCK DIAGRAM

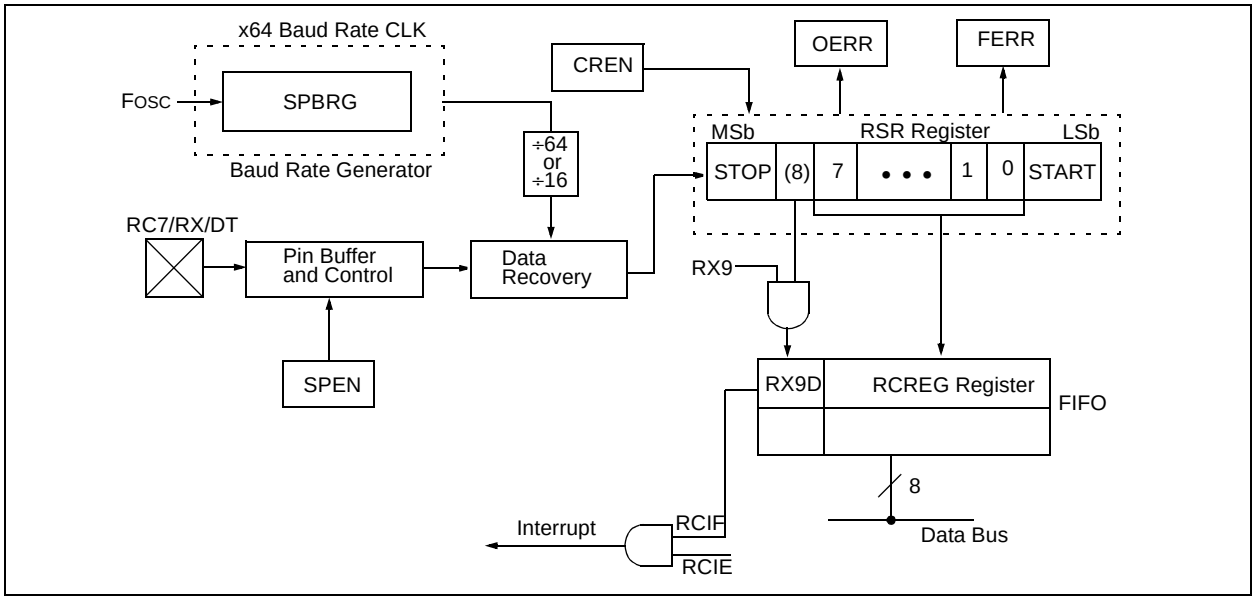

FIGURE 10-5: ASYNCHRONOUS RECEPTION

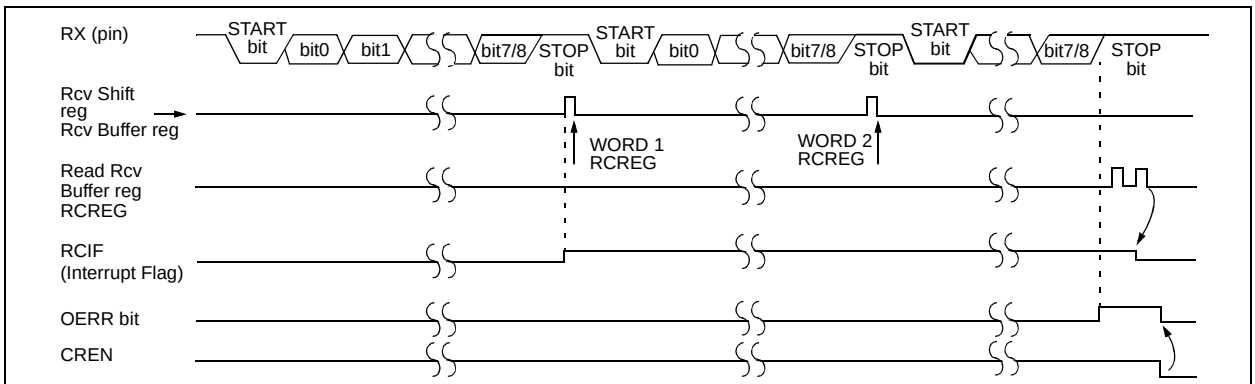

Note: This timing diagram shows three words appearing on the RX input. The RCREG (receive buffer) is read after the third word, causing the OERR (overrun) bit to be set. An overrun error indicates an error in user firmware.

Steps to follow when setting up an Asynchronous Reception:

1. Initialize the SPBRG register for the appropriate baud rate. If a high speed baud rate is desired, set bit BRGH (Section 10.1).
2. Enable the asynchronous serial port by clearing bit SYNC and setting bit SPEN.
3. If interrupts are desired, then set enable bit RCIE.
4. If 9-bit reception is desired, then set bit RX9.
5. Enable the reception by setting bit CREN.
6. Flag bit RCIF will be set when reception is complete and an interrupt will be generated if enable bit RCIE is set.
7. Read the RCSTA register to get the ninth bit (if enabled) and determine if any error occurred during reception.
8. Read the 8-bit received data by reading the RCREG register.
9. If any error occurred, clear the error by clearing enable bit CREN.
10. If using interrupts, ensure that GIE and PIE in the INTCON register are set.

TABLE 10-6: REGISTERS ASSOCIATED WITH ASYNCHRONOUS RECEPTION

Address	Name	Bit 7	Bit 6	Bit 5	Bit 4	Bit 3	Bit 2	Bit 1	Bit 0	Value on: POR, BOR	Value on all other RESETS
0Bh, 8Bh, 10Bh,18Bh	INTCON	GIE	PEIE	T0IE	INTE	RBIE	T0IF	INTF	RBIF	0000 000x	0000 000u
0Ch	PIR1	PSPIF(1)	ADIF	RCIF	TXIF	SSPIF	CCP1IF	TMR2IF	TMR1IF	0000 0000	0000 0000
18h	RCSTA	SPEN	RX9	SREN	CREN	—	FERR	OERR	RX9D	0000 -00x	0000 -00x
1Ah	RCREG	USART Receive Register								0000 0000	0000 0000
8Ch	PIE1	PSPIE(1)	ADIE	RCIE	TXIE	SSPIE	CCP1IE	TMR2IE	TMR1IE	0000 0000	0000 0000
98h	TXSTA	CSRC	TX9	TXEN	SYNC	—	BRGH	TRMT	TX9D	0000 -010	0000 -010
99h	SPBRG	Baud Rate Generator Register								0000 0000	0000 0000

Legend: x = unknown, - = unimplemented locations read as '0'. Shaded cells are not used for asynchronous reception.
Note 1: Bits PSPIE and PSPIF are reserved on the PIC16F73/76 devices; always maintain these bits clear.

 © 2000 Microchip Technology Inc.

FIGURE 10-6: USART RECEIVE BLOCK DIAGRAM

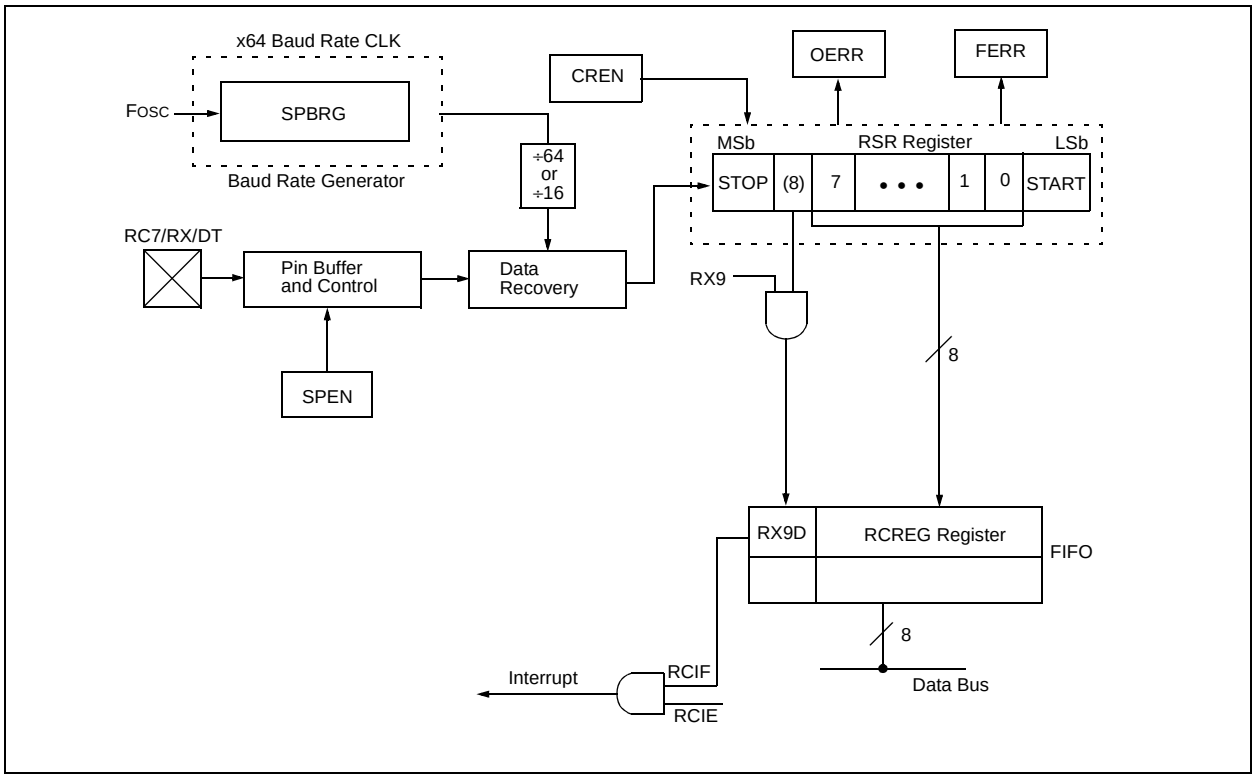

TABLE 10-7: REGISTERS ASSOCIATED WITH ASYNCHRONOUS RECEPTION

Address	Name	Bit 7	Bit 6	Bit 5	Bit 4	Bit 3	Bit 2	Bit 1	Bit 0	Value on: POR, BOR	Value on all other RESETS
0Bh, 8Bh, 10Bh,18Bh	INTCON	GIE	PEIE	T0IE	INTE	RBIE	T0IF	INTF	RBIF	0000 000x	0000 000u
0Ch	PIR1	PSPIF(1)	ADIF	RCIF	TXIF	SSPIF	CCP1IF	TMR2IF	TMR1IF	0000 0000	0000 0000
18h	RCSTA	SPEN	RX9	SREN	CREN	—	FERR	OERR	RX9D	0000 -00x	0000 -00x
1Ah	RCREG	USART Receive Register								0000 0000	0000 0000
8Ch	PIE1	PSPIE(1)	ADIE	RCIE	TXIE	SSPIE	CCP1IE	TMR2IE	TMR1IE	0000 0000	0000 0000
98h	TXSTA	CSRC	TX9	TXEN	SYNC	—	BRGH	TRMT	TX9D	0000 -010	0000 -010
99h	SPBRG	Baud Rate Generator Register								0000 0000	0000 0000

Legend: x = unknown, - = unimplemented locations read as '0'. Shaded cells are not used for Asynchronous Reception.
Note 1: Bits PSPIE and PSPIF are reserved on the PIC16F73/76 devices; always maintain these bits clear.

10.3 USART Synchronous Master Mode

In Synchronous Master mode, the data is transmitted in a half-duplex manner (i.e., transmission and reception do not occur at the same time). When transmitting data, the reception is inhibited and vice versa. Synchronous mode is entered by setting bit SYNC (TXSTA<4>). In addition, enable bit SPEN (RCSTA<7>) is set in order to configure the RC6/TX/CK and RC7/RX/DT I/O pins to CK (clock) and DT (data) lines, respectively. The Master mode indicates that the processor transmits the master clock on the CK line. The Master mode is entered by setting bit CSRC (TXSTA<7>).

10.3.1 USART SYNCHRONOUS MASTER TRANSMISSION

The USART transmitter block diagram is shown in Figure 10-6. The heart of the transmitter is the transmit (serial) shift register (TSR). The shift register obtains its data from the read/write transmit buffer register TXREG. The TXREG register is loaded with data in software. The TSR register is not loaded until the last bit has been transmitted from the previous load. As soon as the last bit is transmitted, the TSR is loaded with new data from the TXREG (if available). Once the TXREG register transfers the data to the TSR register (occurs in one Tcycle), the TXREG is empty and interrupt bit TXIF (PIR1<4>) is set. The interrupt can be enabled/disabled by setting/clearing enable bit TXIE (PIE1<4>). Flag bit TXIF will be set regardless of the state of enable bit TXIE and cannot be cleared in software. It will reset only when new data is loaded into the TXREG register. While flag bit TXIF indicates the status of the TXREG register, another bit TRMT (TXSTA<1>) shows the status of the TSR register. TRMT is a read only bit which is set when the TSR is empty. No interrupt logic is tied to this bit, so the user has to poll this bit in order to determine if the TSR register is empty. The TSR is not mapped in data memory, so it is not available to the user.

Transmission is enabled by setting enable bit TXEN (TXSTA<5>). The actual transmission will not occur until the TXREG register has been loaded with data. The first data bit will be shifted out on the next available rising edge of the clock on the CK line. Data out is stable around the falling edge of the synchronous clock (Figure 10-7). The transmission can also be started by first loading the TXREG register and then setting bit TXEN (Figure 10-8). This is advantageous when slow baud rates are selected, since the BRG is kept in RESET when bits TXEN, CREN and SREN are clear. Setting enable bit TXEN will start the BRG, creating a shift clock immediately. Normally, when transmission is first started, the TSR register is empty, so a transfer to the TXREG register will result in an immediate transfer to TSR resulting in an empty TXREG. Back-to-back transfers are possible.

Clearing enable bit TXEN during a transmission will cause the transmission to be aborted and will reset the transmitter. The DT and CK pins will revert to hi-impedance. If either bit CREN or bit SREN is set during a transmission, the transmission is aborted and the DT pin reverts to a hi-impedance state (for a reception). The CK pin will remain an output if bit CSRC is set (internal clock). The transmitter logic, however, is not reset, although it is disconnected from the pins. In order to reset the transmitter, the user has to clear bit TXEN. If bit SREN is set (to interrupt an on-going transmission and receive a single word), then after the single word is received, bit SREN will be cleared and the serial port will revert back to transmitting, since bit TXEN is still set. The DT line will immediately switch from hi-impedance receive mode to transmit and start driving. To avoid this, bit TXEN should be cleared.

In order to select 9-bit transmission, the TX9 (TXSTA<6>) bit should be set and the ninth bit should be written to bit TX9D (TXSTA<0>). The ninth bit must be written before writing the 8-bit data to the TXREG register. This is because a data write to the TXREG can result in an immediate transfer of the data to the TSR register (if the TSR is empty). If the TSR was empty and the TXREG was written before writing the “new” TX9D, the “present” value of bit TX9D is loaded.

Steps to follow when setting up a Synchronous Master Transmission:

1. Initialize the SPBRG register for the appropriate baud rate (Section 10.1).
2. Enable the synchronous master serial port by setting bits SYNC, SPEN and CSRC.
3. If interrupts are desired, set enable bit TXIE.
4. If 9-bit transmission is desired, set bit TX9.
5. Enable the transmission by setting bit TXEN.
6. If 9-bit transmission is selected, the ninth bit should be loaded in bit TX9D.
7. Start transmission by loading data to the TXREG register.
8. If using interrupts, ensure that GIE and PIE in the INTCON register are set.

 © 2000 Microchip Technology Inc.

TABLE 10-8: REGISTERS ASSOCIATED WITH SYNCHRONOUS MASTER TRANSMISSION

Address	Name	Bit 7	Bit 6	Bit 5	Bit 4	Bit 3	Bit 2	Bit 1	Bit 0	Value on: POR, BOR	Value on all other RESETS
0Bh, 8Bh, 10Bh,18Bh	INTCON	GIE	PEIE	T0IE	INTE	RBIE	T0IF	INTF	RBIF	0000 000x	0000 000u
0Ch	PIR1	PSPIF(1)	ADIF	RCIF	TXIF	SSPIF	CCP1IF	TMR2IF	TMR1IF	0000 0000	0000 0000
18h	RCSTA	SPEN	RX9	SREN	CREN	—	FERR	OERR	RX9D	0000 -00x	0000 -00x
19h	TXREG	USART Transmit Register								0000 0000	0000 0000
8Ch	PIE1	PSPIE(1)	ADIE	RCIE	TXIE	SSPIE	CCP1IE	TMR2IE	TMR1IE	0000 0000	0000 0000
98h	TXSTA	CSRC	TX9	TXEN	SYNC	—	BRGH	TRMT	TX9D	0000 -010	0000 -010
99h	SPBRG	Baud Rate Generator Register								0000 0000	0000 0000

Legend: x = unknown, - = unimplemented, read as '0'. Shaded cells are not used for synchronous master transmission.
Note 1: Bits PSPIE and PSPIF are reserved on the PIC16F73/76 devices; always maintain these bits clear.

FIGURE 10-7: SYNCHRONOUS TRANSMISSION

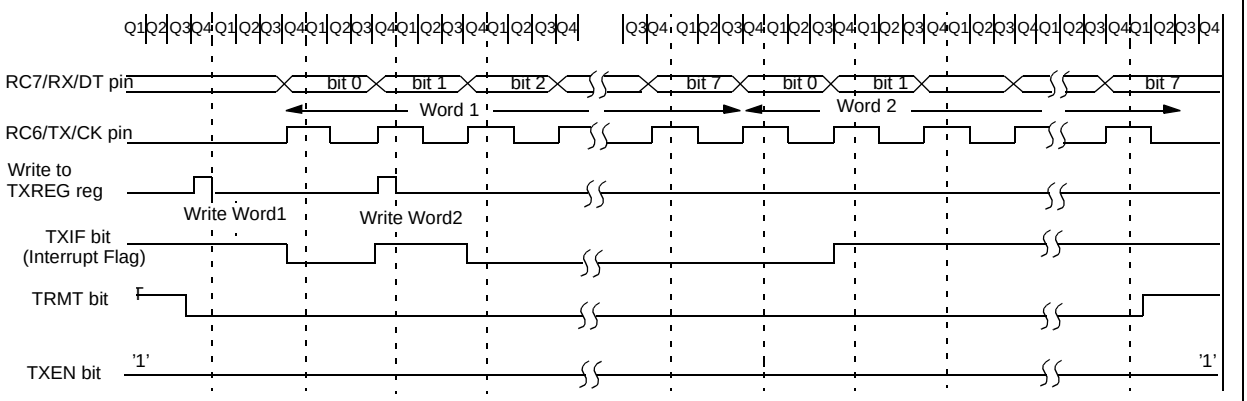

Note: Sync Master mode; SPBRG = '0'. Continuous transmission of two 8-bit words.

FIGURE 10-8: SYNCHRONOUS TRANSMISSION (THROUGH TXEN)

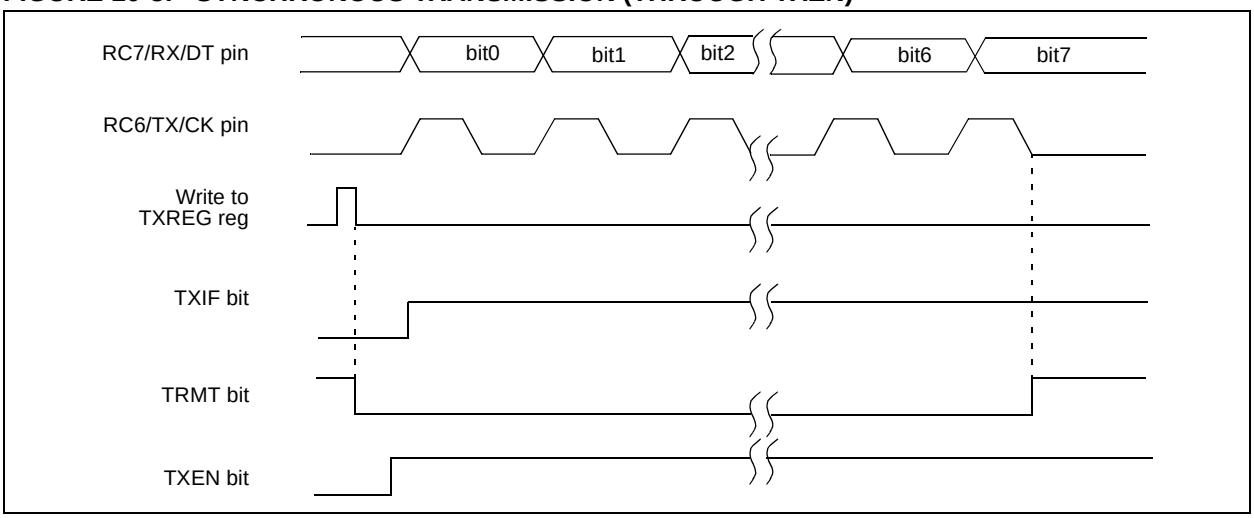

10.3.2 USART SYNCHRONOUS MASTER RECEPTION

Once synchronous mode is selected, reception is enabled by setting either enable bit SREN (RCSTA<5>), or enable bit CREN (RCSTA<4>). Data is sampled on the RC7/RX/DT pin on the falling edge of the clock. If enable bit SREN is set, then only a single word is received. If enable bit CREN is set, the reception is continuous until CREN is cleared. If both bits are set, CREN takes precedence. After clocking the last bit, the received data in the Receive Shift Register (RSR) is transferred to the RCREG register (if it is empty). When the transfer is complete, interrupt flag bit RCIF (PIR1<5>) is set. The actual interrupt can be enabled/disabled by setting/clearing enable bit RCIE (PIE1<5>). Flag bit RCIF is a read only bit, which is reset by the hardware. In this case, it is reset when the RCREG register has been read and is empty. The RCREG is a double buffered register (i.e., it is a two deep FIFO). It is possible for two bytes of data to be received and transferred to the RCREG FIFO and a third byte to begin shifting into the RSR register. On the clocking of the last bit of the third byte, if the RCREG register is still full, then overrun error bit OERR (RCSTA<1>) is set. The word in the RSR will be lost. The RCREG register can be read twice to retrieve the two bytes in the FIFO. Bit OERR has to be cleared in software (by clearing bit CREN). If bit OERR is set, transfers from the RSR to the RCREG are inhibited, so it is essential to clear bit OERR if it is set. The ninth receive bit is buffered the same way as the receive data. Reading the RCREG register will load bit RX9D with a new value, therefore, it is essential for the user to read the RCSTA register before reading RCREG, in order not to lose the old RX9D information.

Steps to follow when setting up a Synchronous Master Reception:

1. Initialize the SPBRG register for the appropriate baud rate (Section 10.1).
2. Enable the synchronous master serial port by setting bits SYNC, SPEN and CSRC.
3. Ensure bits CREN and SREN are clear.
4. If interrupts are desired, then set enable bit RCIE.
5. If 9-bit reception is desired, then set bit RX9.
6. If a single reception is required, set bit SREN. For continuous reception set bit CREN.
7. Interrupt flag bit RCIF will be set when reception is complete and an interrupt will be generated if enable bit RCIE was set.
8. Read the RCSTA register to get the ninth bit (if enabled) and determine if any error occurred during reception.
9. Read the 8-bit received data by reading the RCREG register.
10. If any error occurred, clear the error by clearing bit CREN.
11. If using interrupts, ensure that GIE and PIE in the INTCON register are set.

TABLE 10-9: REGISTERS ASSOCIATED WITH SYNCHRONOUS MASTER RECEPTION

Address	Name	Bit 7	Bit 6	Bit 5	Bit 4	Bit 3	Bit 2	Bit 1	Bit 0	Value on: POR, BOR	Value on all other RESETS
0Bh, 8Bh, 10Bh,18Bh	INTCON	GIE	PEIE	T0IE	INTE	RBIE	T0IF	INTF	RBIF	0000 000x	0000 000u
0Ch	PIR1	PSPIF(1)	ADIF	RCIF	TXIF	SSPIF	CCP1IF	TMR2IF	TMR1IF	0000 0000	0000 0000
18h	RCSTA	SPEN	RX9	SREN	CREN	—	FERR	OERR	RX9D	0000 -00x	0000 -00x
1Ah	RCREG	USART Receive Register								0000 0000	0000 0000
8Ch	PIE1	PSPIE(1)	ADIE	RCIE	TXIE	SSPIE	CCP1IE	TMR2IE	TMR1IE	0000 0000	0000 0000
98h	TXSTA	CSRC	TX9	TXEN	SYNC	—	BRGH	TRMT	TX9D	0000 -010	0000 -010
99h	SPBRG	Baud Rate Generator Register								0000 0000	0000 0000

Legend: x = unknown, - = unimplemented read as '0'. Shaded cells are not used for synchronous master reception.
Note 1: Bits PSPIE and PSPIF are reserved on the PIC16F73/76 devices; always maintain these bits clear.

 © 2000 Microchip Technology Inc.

FIGURE 10-9: SYNCHRONOUS RECEPTION (MASTER MODE, SREN)

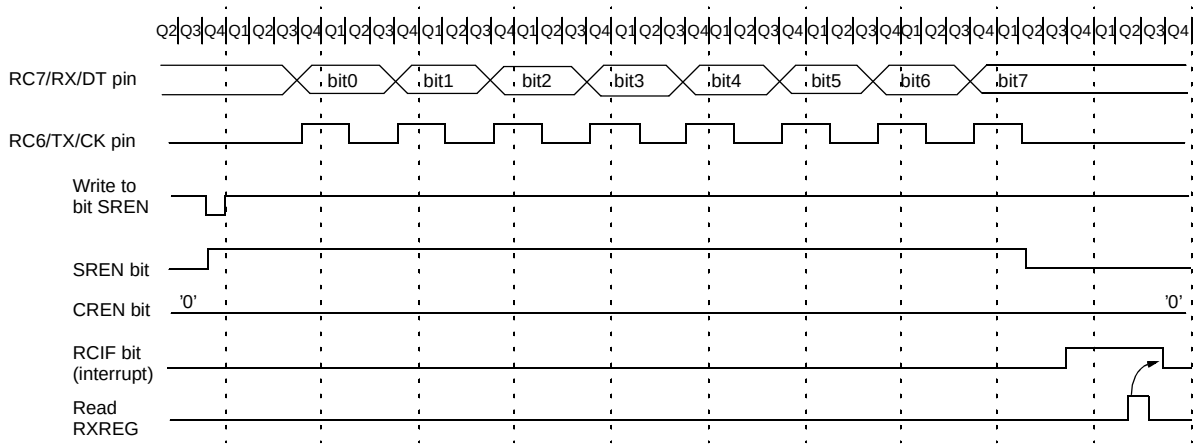

Note: Timing diagram demonstrates SYNC Master mode with bit SREN = '1' and bit BRG = '0'.

10.4 USART Synchronous Slave Mode

Synchronous Slave mode differs from the Master mode, in the fact that the shift clock is supplied externally at the RC6/TX/CK pin (instead of being supplied internally in Master mode). This allows the device to transfer or receive data while in SLEEP mode. Slave mode is entered by clearing bit CSRC (TXSTA<7>).

10.4.1 USART SYNCHRONOUS SLAVE TRANSMIT

The operation of the Synchronous Master and Slave modes are identical except in the case of the SLEEP mode.

If two words are written to the TXREG and then the `SLEEP` instruction is executed, the following will occur:

a) The first word will immediately transfer to the TSR register and transmit.
b) The second word will remain in TXREG register.
c) Flag bit TXIF will not be set.
d) When the first word has been shifted out of TSR, the TXREG register will transfer the second word to the TSR and flag bit TXIF will now be set.
e) If enable bit TXIE is set, the interrupt will wake the chip from SLEEP and if the global interrupt is enabled, the program will branch to the interrupt vector (0004h).

Steps to follow when setting up a Synchronous Slave Transmission:

1. Enable the synchronous slave serial port by setting bits SYNC and SPEN and clearing bit CSRC.
2. Clear bits CREN and SREN.
3. If interrupts are desired, then set enable bit TXIE.
4. If 9-bit transmission is desired, then set bit TX9.
5. Enable the transmission by setting enable bit TXEN.
6. If 9-bit transmission is selected, the ninth bit should be loaded in bit TX9D.
7. Start transmission by loading data to the TXREG register.
8. If using interrupts, ensure that GIE and PIE in the INTCON register are set.

10.4.2 USART SYNCHRONOUS SLAVE RECEPTION

The operation of the Synchronous Master and Slave modes is identical, except in the case of the SLEEP mode. Bit SREN is a “don't care” in Slave mode.

If receive is enabled by setting bit CREN prior to the `SLEEP` instruction, then a word may be received during SLEEP. On completely receiving the word, the RSR register will transfer the data to the RCREG register and if enable bit RCIE bit is set, the interrupt generated will wake the chip from SLEEP. If the global interrupt is enabled, the program will branch to the interrupt vector (0004h).

Steps to follow when setting up a Synchronous Slave Reception:

1. Enable the synchronous master serial port by setting bits SYNC and SPEN and clearing bit CSRC.
2. If interrupts are desired, set enable bit RCIE.
3. If 9-bit reception is desired, set bit RX9.
4. To enable reception, set enable bit CREN.
5. Flag bit RCIF will be set when reception is complete and an interrupt will be generated, if enable bit RCIE was set.
6. Read the RCSTA register to get the ninth bit (if enabled) and determine if any error occurred during reception.
7. Read the 8-bit received data by reading the RCREG register.
8. If any error occurred, clear the error by clearing bit CREN.
9. If using interrupts, ensure that GIE and PIE in the INTCON register are set.

 © 2000 Microchip Technology Inc.

TABLE 10-10: REGISTERS ASSOCIATED WITH SYNCHRONOUS SLAVE TRANSMISSION

Address	Name	Bit 7	Bit 6	Bit 5	Bit 4	Bit 3	Bit 2	Bit 1	Bit 0	Value on: POR, BOR	Value on all other RESETS
0Bh, 8Bh, 10Bh,18Bh	INTCON	GIE	PEIE	T0IE	INTE	RBIE	T0IF	INTF	RBIF	0000 000x	0000 000u
0Ch	PIR1	PSPIF(1)	ADIF	RCIF	TXIF	SSPIF	CCP1IF	TMR2IF	TMR1IF	0000 0000	0000 0000
18h	RCSTA	SPEN	RX9	SREN	CREN	ADDEN	FERR	OERR	RX9D	0000 000x	0000 000x
19h	TXREG	USART Transmit Register								0000 0000	0000 0000
8Ch	PIE1	PSPIE(1)	ADIE	RCIE	TXIE	SSPIE	CCP1IE	TMR2IE	TMR1IE	0000 0000	0000 0000
98h	TXSTA	CSRC	TX9	TXEN	SYNC	—	BRGH	TRMT	TX9D	0000 -010	0000 -010
99h	SPBRG	Baud Rate Generator Register								0000 0000	0000 0000

Legend: x = unknown, - = unimplemented read as '0'. Shaded cells are not used for Synchronous Slave Transmission.
Note 1: Bits PSPIE and PSPIF are reserved on the PIC16F73/76 devices; always maintain these bits clear.

TABLE 10-11: REGISTERS ASSOCIATED WITH SYNCHRONOUS SLAVE RECEPTION

Address	Name	Bit 7	Bit 6	Bit 5	Bit 4	Bit 3	Bit 2	Bit 1	Bit 0	Value on: POR, BOR	Value on all other RESETS
0Bh, 8Bh, 10Bh,18Bh	INTCON	GIE	PEIE	T0IE	INTE	RBIE	T0IF	INTF	RBIF	0000 000x	0000 000u
0Ch	PIR1	PSPIF(1)	ADIF	RCIF	TXIF	SSPIF	CCP1IF	TMR2IF	TMR1IF	0000 0000	0000 0000
18h	RCSTA	SPEN	RX9	SREN	CREN	ADDEN	FERR	OERR	RX9D	0000 000x	0000 000x
1Ah	RCREG	USART Receive Register								0000 0000	0000 0000
8Ch	PIE1	PSPIE(1)	ADIE	RCIE	TXIE	SSPIE	CCP1IE	TMR2IE	TMR1IE	0000 0000	0000 0000
98h	TXSTA	CSRC	TX9	TXEN	SYNC	—	BRGH	TRMT	TX9D	0000 -010	0000 -010
99h	SPBRG	Baud Rate Generator Register								0000 0000	0000 0000

Legend: x = unknown, - = unimplemented read as '0'. Shaded cells are not used for Synchronous Slave Reception.
Note 1: Bits PSPIE and PSPIF are reserved on the PIC16F73/76 devices, always maintain these bits clear.

NOTES:

 © 2000 Microchip Technology Inc.

11.0 ANALOG-TO-DIGITAL CONVERTER (A/D) MODULE

The 8-bit analog-to-digital (A/D) converter module has five inputs for the PIC16F73/76 and eight for the PIC16F74/77.

The A/D allows conversion of an analog input signal to a corresponding 8-bit digital number. The output of the sample and hold is the input into the converter, which generates the result via successive approximation. The analog reference voltage is software selectable to either the device's positive supply voltage (V_{DD}), or the voltage level on the RA3/AN3/V_{REF} pin.

The A/D converter has a unique feature of being able to operate while the device is in SLEEP mode. To operate in SLEEP, the A/D conversion clock must be derived from the A/D's internal RC oscillator.

The A/D module has three registers. These registers are:

- A/D Result Register (ADRES)
- A/D Control Register 0 (ADCON0)
- A/D Control Register 1 (ADCON1)

The ADCON0 register, shown in Register 11-1, controls the operation of the A/D module. The ADCON1 register, shown in Register 11-2, configures the functions of the port pins. The port pins can be configured as analog inputs (RA3 can also be a voltage reference), or as digital I/O.

Additional information on using the A/D module can be found in the PICmicro™ Mid-Range MCU Family Reference Manual (DS33023) and in Application Note, AN546.

REGISTER 11-1: ADCON0 REGISTER (ADDRESS 1Fh)

R/W-0	R/W-0	R/W-0	R/W-0	R/W-0	R/W-0	U-0	R/W-0
ADCS1	ADCS0	CHS2	CHS1	CHS0	GO/$\overline{\text{DONE}}$	—	ADON
bit 7							bit 0

bit 7-6 **ADCS1:ADCS0:** A/D Conversion Clock Select bits
00 = F_{OSC}/2
01 = F_{OSC}/8
10 = F_{OSC}/32
11 = F_{RC} (clock derived from the internal A/D module RC oscillator)

bit 5-3 **CHS2:CHS0**: Analog Channel Select bits
000 = channel 0, (RA0/AN0)
001 = channel 1, (RA1/AN1)
010 = channel 2, (RA2/AN2)
011 = channel 3, (RA3/AN3)
100 = channel 4, (RA5/AN4)
101 = channel 5, (RE0/AN5)(1)
110 = channel 6, (RE1/AN6)(1)
111 = channel 7, (RE2/AN7)(1)

bit 2 **GO/$\overline{\text{DONE}}$:** A/D Conversion Status bit

If ADON = 1:
1 = A/D conversion in progress (setting this bit starts the A/D conversion)
0 = A/D conversion not in progress (This bit is automatically cleared by hardware when the A/D conversion is complete)

bit 1 **Unimplemented**: Read as '0'

bit 0 **ADON**: A/D On bit
1 = A/D converter module is operating
0 = A/D converter module is shutoff and consumes no operating current

Note 1: A/D channels 5, 6 and 7 are implemented on the PIC16F74/77 only.

Legend:			
R = Readable bit	W = Writable bit	U = Unimplemented bit, read as '0'	
- n = Value at POR reset	'1' = Bit is set	'0' = Bit is cleared	x = Bit is unknown

REGISTER 11-2: ADCON1 REGISTER (ADDRESS 9Fh)

U-0	U-0	U-0	U-0	U-0	R/W-0	R/W-0	R/W-0
—	—	—	—	—	PCFG2	PCFG1	PCFG0
bit 7							bit 0

bit 7-3 **Unimplemented**: Read as '0'

bit 2-0 **PCFG2:PCFG0**: A/D Port Configuration Control bits

PCFG2:PCFG0	RA0	RA1	RA2	RA5	RA3	RE0(1)	RE1(1)	RE2(1)	VREF
000	A	A	A	A	A	A	A	A	VDD
001	A	A	A	A	VREF	A	A	A	RA3
010	A	A	A	A	A	D	D	D	VDD
011	A	A	A	A	VREF	D	D	D	RA3
100	A	A	D	D	A	D	D	D	VDD
101	A	A	D	D	VREF	D	D	D	RA3
11x	D	D	D	D	D	D	D	D	VDD

A = Analog input
D = Digital I/O

Note 1: RE0, RE1 and RE2 are implemented on the PIC16F74/77 only.

Legend:			
R = Readable bit	W = Writable bit	U = Unimplemented bit, read as ‘0’	
- n = Value at POR reset	’1’ = Bit is set	’0’ = Bit is cleared	x = Bit is unknown

 © 2000 Microchip Technology Inc.

The following steps should be followed for doing an A/D conversion:

1. Configure the A/D module:
   - Configure analog pins / voltage reference / and digital I/O (ADCON1)
   - Select A/D input channel (ADCON0)
   - Select A/D conversion clock (ADCON0)
   - Turn on A/D module (ADCON0)
2. Configure A/D interrupt (if desired):
   - Clear ADIF bit
   - Set ADIE bit
   - Set PEIE bit
   - Set GIE bit
3. Wait the required acquisition time.
4. Start conversion:
   - Set GO/$\overline{\text{DONE}}$ bit (ADCON0)
5. Wait for A/D conversion to complete, by either:
   - Polling for the GO/$\overline{\text{DONE}}$ bit to be cleared (interrupts disabled)

   OR
   - Waiting for the A/D interrupt
6. Read A/D result register (ADRES), clear bit ADIF if required.
7. For next conversion, go to step 1 or step 2, as required. The A/D conversion time per bit is defined as TAD. A minimum wait of 2TAD is required before next acquisition starts.

FIGURE 11-1: A/D BLOCK DIAGRAM

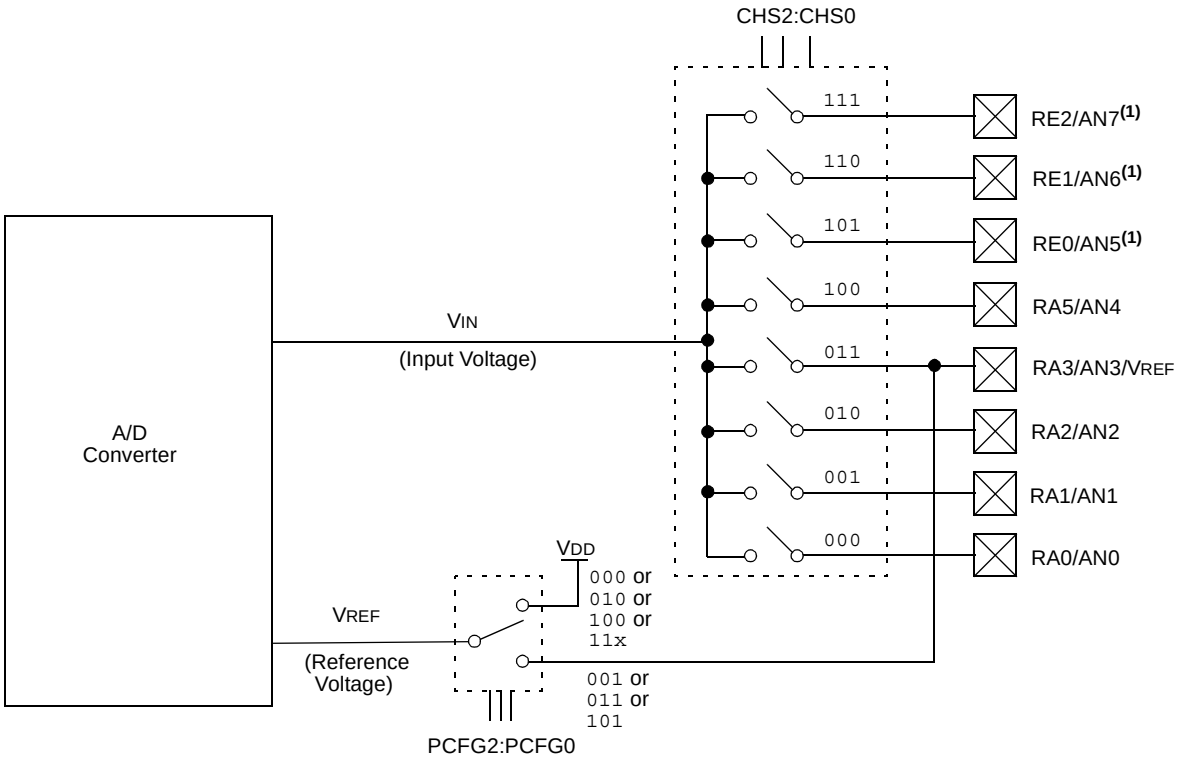

Note 1: Not available on PIC16F73/76.

11.1 A/D Acquisition Requirements

For the A/D converter to meet its specified accuracy, the charge holding capacitor (CHOLD) must be allowed to fully charge to the input channel voltage level. The analog input model is shown in Figure 11-2. The source impedance (RS) and the internal sampling switch (RSS) impedance directly affect the time required to charge the capacitor CHOLD. The sampling switch (RSS) impedance varies over the device voltage (VDD), Figure 11-2. The source impedance affects the offset voltage at the analog input (due to pin leakage current).

The maximum recommended impedance for analog sources is 10 kΩ. After the analog input channel is selected (changed), the acquisition must pass before the conversion can be started.

To calculate the minimum acquisition time, TACQ, see the PICmicro™ Mid-Range MCU Family Reference Manual (DS33023A). In general, however, given a max of 10kΩ and at a temperature of 100°C, TACQ will be no more than 16µsec.

FIGURE 11-2: ANALOG INPUT MODEL

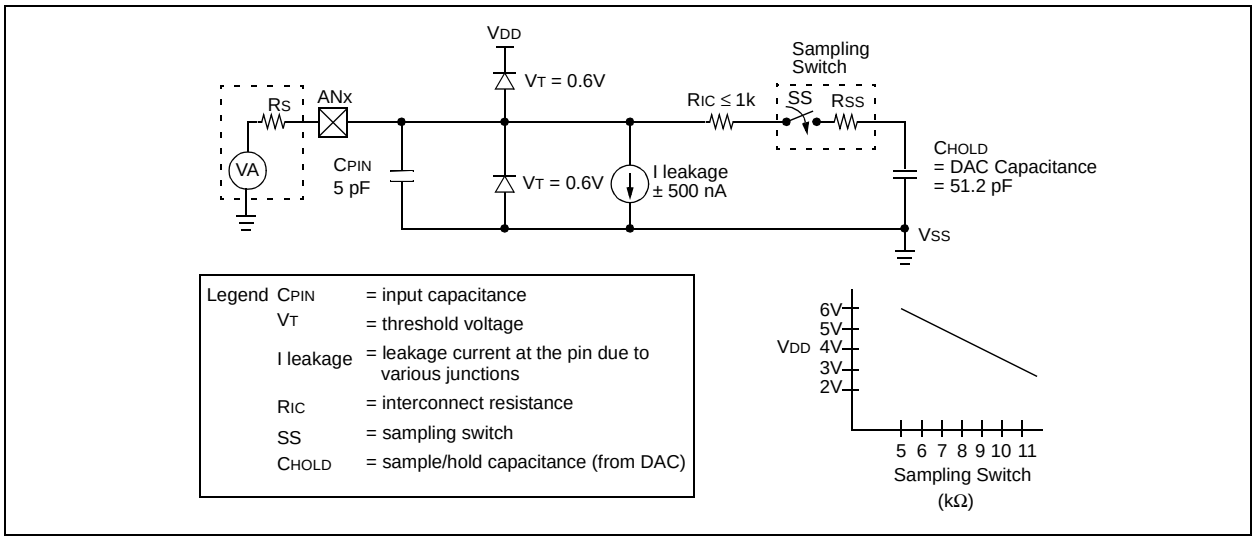

TABLE 11-1: TAD vs. MAXIMUM DEVICE OPERATING FREQUENCIES (STANDARD DEVICES (C))

AD Clock Source (TAD)		Maximum Device Frequency
Operation	**ADCS1:ADCS0**	**Max.**
2TOSC	00	1.25 MHz
8TOSC	01	5 MHz
32TOSC	10	20 MHz
RC(1, 2, 3)	11	**(Note 1)**

Note 1: The RC source has a typical TAD time of 4 µs but can vary between 2-6 µs.
2: When the device frequencies are greater than 1 MHz, the RC A/D conversion clock source is only recommended for SLEEP operation.
3: For extended voltage devices (LC), please refer to the Electrical Specifications section.

 © 2000 Microchip Technology Inc.

11.2 Selecting the A/D Conversion Clock

The A/D conversion time per bit is defined as TAD. The A/D conversion requires 9.0TAD per 8-bit conversion. The source of the A/D conversion clock is software selectable. The four possible options for TAD are:

- 2TOSC
- 8TOSC
- 32TOSC
- Internal RC oscillator (2-6 µs)

For correct A/D conversions, the A/D conversion clock (TAD) must be selected to ensure a minimum TAD time of 1.6 µs.

11.3 Configuring Analog Port Pins

The ADCON1, TRISA and TRISE registers control the operation of the A/D port pins. The port pins that are desired as analog inputs must have their corresponding TRIS bits set (input). If the TRIS bit is cleared (output), the digital output level (VOH or VOL) will be converted.

The A/D operation is independent of the state of the CHS2:CHS0 bits and the TRIS bits.

Note 1:	When reading the port register, all pins configured as analog input channels will read as cleared (a low level). Pins configured as digital inputs will convert an analog input. Analog levels on a digitally configured input will not affect the conversion accuracy.
2:	Analog levels on any pin that is defined as a digital input, but not as an analog input, may cause the input buffer to consume current that is out of the devices specification.

11.4 A/D Conversions

Note:	The GO/$\overline{\text{DONE}}$ bit should **NOT** be set in the same instruction that turns on the A/D.

Clearing the GO/$\overline{\text{DONE}}$ bit during a conversion will abort the current conversion. The ADRES register will NOT be updated with the partially completed A/D conversion sample. That is, the ADRES register will continue to contain the value of the last completed conversion (or the last value written to the ADRES register). After the A/D conversion is aborted, a 2TAD wait is required before the next acquisition is started. After this 2TAD wait, an acquisition is automatically started on the selected channel. The GO/$\overline{\text{DONE}}$ bit can then be set to start the conversion.

11.5 A/D Operation During SLEEP

The A/D module can operate during SLEEP mode. This requires that the A/D clock source be set to RC (ADCS1:ADCS0 = `11`). When the RC clock source is selected, the A/D module waits one instruction cycle before starting the conversion. This allows the `SLEEP` instruction to be executed, which eliminates all digital switching noise from the conversion. When the conversion is completed, the GO/$\overline{\text{DONE}}$ bit will be cleared, and the result loaded into the ADRES register. If the A/D interrupt is enabled, the device will wake-up from SLEEP. If the A/D interrupt is not enabled, the A/D module will then be turned off, although the ADON bit will remain set.

When the A/D clock source is another clock option (not RC), a `SLEEP` instruction will cause the present conversion to be aborted and the A/D module to be turned off, though the ADON bit will remain set.

Turning off the A/D places the A/D module in its lowest current consumption state.

Note:	For the A/D module to operate in SLEEP, the A/D clock source must be set to RC (ADCS1:ADCS0 = `11`). To perform an A/D conversion in SLEEP, ensure the `SLEEP` instruction immediately follows the instruction that sets the GO/$\overline{\text{DONE}}$ bit.

11.6 Effects of a RESET

A device RESET forces all registers to their RESET state. The A/D module is disabled and any conversion in progress is aborted. All A/D input pins are configured as analog inputs.

The ADRES register will contain unknown data after a Power-on Reset.

11.7 Use of the CCP Trigger

An A/D conversion can be started by the “special event trigger” of the CCP2 module. This requires that the CCP2M3:CCP2M0 bits (CCP2CON<3:0>) be programmed as `1011` and that the A/D module is enabled (ADON bit is set). When the trigger occurs, the GO/$\overline{\text{DONE}}$ bit will be set, starting the A/D conversion, and the Timer1 counter will be reset to zero. Timer1 is reset to automatically repeat the A/D acquisition period with minimal software overhead (moving the ADRES to the desired location). The appropriate analog input channel must be selected and the minimum acquisition done before the “special event trigger” sets the GO/$\overline{\text{DONE}}$ bit (starts a conversion).

If the A/D module is not enabled (ADON is cleared), then the “special event trigger” will be ignored by the A/D module, but will still reset the Timer1 counter.

TABLE 11-2: SUMMARY OF A/D REGISTERS

Address	Name	Bit 7	Bit 6	Bit 5	Bit 4	Bit 3	Bit 2	Bit 1	Bit 0	Value on: POR, BOR	Value on all other RESETS
0Bh,8Bh, 10Bh,18Bh	INTCON	GIE	PEIE	T0IE	INTE	RBIE	T0IF	INTF	RBIF	0000 000x	0000 000u
0Ch	PIR1	PSPIF(1)	ADIF	RCIF	TXIF	SSPIF	CCP1IF	TMR2IF	TMR1IF	0000 0000	0000 0000
0Dh	PIR2	—	—	—	—	—	—	—	CCP2IF	---- ---0	---- ---0
8Ch	PIE1	PSPIE(1)	ADIE	RCIE	TXIE	SSPIE	CCP1IE	TMR2IE	TMR1IE	0000 0000	0000 0000
8Dh	PIE2	—	—	—	—	—	—	—	CCP2IE	---- ---0	---- ---0
1Eh	ADRES	A/D Result Register								xxxx xxxx	uuuu uuuu
1Fh	ADCON0	ADCS1	ADCS0	CHS2	CHS1	CHS0	GO/$\overline{\text{DONE}}$	—	ADON	0000 00-0	0000 00-0
9Fh	ADCON1	—	—	—	—	—	PCFG2	PCFG1	PCFG0	---- -000	---- -000
05h	PORTA	—	—	RA5	RA4	RA3	RA2	RA1	RA0	--0x 0000	--0u 0000
85h	TRISA	—	—	PORTA Data Direction Register						--11 1111	--11 1111
09h	PORTE(2)	—	—	—	—	—	RE2	RE1	RE0	---- -xxx	---- -uuu
89h	TRISE(2)	IBF	OBF	IBOV	PSPMODE	—	PORTE Data Direction Bits			0000 -111	0000 -111

Legend: x = unknown, u = unchanged, - = unimplemented read as '0'. Shaded cells are not used for A/D conversion.

Note 1: Bits PSPIE and PSPIF are reserved on the PIC16F73/76; always maintain these bits clear.

2: These registers are reserved on the PIC16F73/76.

 © 2000 Microchip Technology Inc.

12.0 SPECIAL FEATURES OF THE CPU

These devices have a host of features intended to maximize system reliability, minimize cost through elimination of external components, provide power saving operating modes and offer code protection. These are:

- Oscillator Selection
- RESET
  - Power-on Reset (POR)
  - Power-up Timer (PWRT)
  - Oscillator Start-up Timer (OST)
  - Brown-out Reset (BOR)
- Interrupts
- Watchdog Timer (WDT)
- SLEEP
- Code Protection
- ID Locations
- In-Circuit Serial Programming

These devices have a Watchdog Timer, which can be shut off only through configuration bits. It runs off its own RC oscillator for added reliability.

There are two timers that offer necessary delays on power-up. One is the Oscillator Start-up Timer (OST), intended to keep the chip in RESET until the crystal oscillator is stable. The other is the Power-up Timer (PWRT), which provides a fixed delay of 72 ms (nominal) on power-up only. It is designed to keep the part in RESET while the power supply stabilizes. With these two timers on-chip, most applications need no external RESET circuitry.

SLEEP mode is designed to offer a very low current power-down mode. The user can wake-up from SLEEP through external RESET, Watchdog Timer Wake-up, or through an interrupt.

Several oscillator options are also made available to allow the part to fit the application. The RC oscillator option saves system cost while the LP crystal option saves power. A set of configuration bits are used to select various options.

Additional information on special features is available in the PICmicro™ Mid-Range Reference Manual, (DS33023).

12.1 Configuration Bits

The configuration bits can be programmed (read as '0'), or left unprogrammed (read as '1'), to select various device configurations. These bits are mapped in program memory location 2007h.

The user will note that address 2007h is beyond the user program memory space, which can be accessed only during programming.

REGISTER 12-1: CONFIGURATION WORD

—	—	—	—	—	—	—	BODEN	—	CP0	$\overline{\text{PWRTE}}$	WDTE	F0SC1	F0SC0
bit13													bit0

Register:	CONFIG
Address	2007h
Erased Value:	3FFFh

bit 13-7: **Unimplemented:** Read as '1'

bit 6: **BODEN**: Brown-out Reset Enable bit[(1)]
1 = BOR enabled
0 = BOR disabled

bit 5: **Unimplemented:** Read as '1'

bit 4 **CP0:** Flash Program Memory Code Protection bit
1 = Code protection off
0 = All memory locations code protected

bit 3: **$\overline{\text{PWRTE}}$**: Power-up Timer Enable bit[(1)]
1 = PWRT disabled
0 = PWRT enabled

bit 2: **WDTE**: Watchdog Timer Enable bit
1 = WDT enabled
0 = WDT disabled

bit 1-0: **FOSC1:FOSC0**: Oscillator Selection bits
11 = RC oscillator
10 = HS oscillator
01 = XT oscillator
00 = LP oscillator

Note 1: Enabling Brown-out Reset automatically enables Power-up Timer (PWRT), regardless of the value of bit $\overline{\text{PWRTE}}$. Ensure the Power-up Timer is enabled any time Brown-out Reset is enabled.

 © 2000 Microchip Technology Inc.

12.2 Oscillator Configurations

12.2.1 OSCILLATOR TYPES

The PIC16F7X can be operated in four different oscillator modes. The user can program two configuration bits (FOSC1 and FOSC0) to select one of these four modes:

- LP Low Power Crystal
- XT Crystal/Resonator
- HS High Speed Crystal/Resonator
- RC Resistor/Capacitor

12.2.2 CRYSTAL OSCILLATOR/CERAMIC RESONATORS

In XT, LP or HS modes, a crystal or ceramic resonator is connected to the OSC1/CLKIN and OSC2/CLKOUT pins to establish oscillation (Figure 12-1). The PIC16F7X oscillator design requires the use of a parallel cut crystal. Use of a series cut crystal may give a frequency out of the crystal manufacturers specifications. When in XT, LP or HS modes, the device can have an external clock source to drive the OSC1/CLKIN pin (Figure 12-2). See Table 15-1 for valid external clock frequencies.

FIGURE 12-1: CRYSTAL/CERAMIC RESONATOR OPERATION (HS, XT OR LP OSC CONFIGURATION)

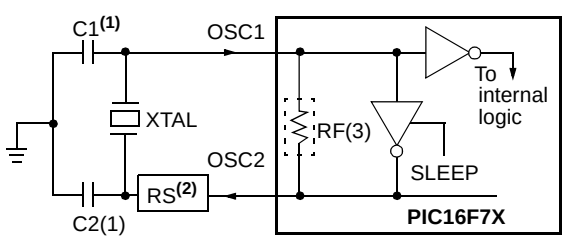

Note 1: See Table 12-1 and Table 12-2 for recommended values of C1 and C2.

2: A series resistor (RS) may be required for AT strip cut crystals.

3: RF varies with the crystal chosen.

FIGURE 12-2: EXTERNAL CLOCK INPUT OPERATION (HS, XT OR LP OSC CONFIGURATION)

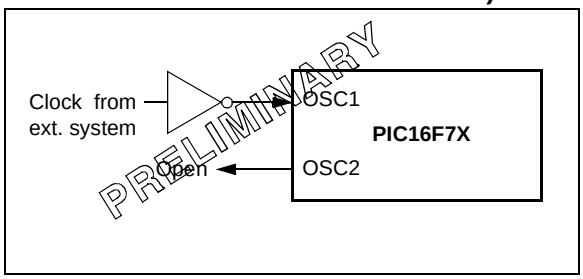

PRELIMINARY

TABLE 12-1: CERAMIC RESONATORS

Ranges Tested:			
Mode	**Freq**	**OSC1**	**OSC2**
XT	455 kHz	68 - 100 pF	68 - 100 pF
	2.0 MHz	15 - 68 pF	15 - 68 pF
	4.0 MHz	15 - 68 pF	15 - 68 pF
HS	8.0 MHz	10 - 68 pF	10 - 68 pF
	16.0 MHz	10 - 22 pF	10 - 22 pF
These values are for design guidance only. See notes at bottom of page.			
Resonators Used:			
455 kHz	Panasonic EFO-A455K04B		± 0.3%
2.0 MHz	Murata Erie CSA2.00MG		± 0.5%
4.0 MHz	Murata Erie CSA4.00MG		± 0.5%
8.0 MHz	Murata Erie CSA8.00MT		± 0.5%
16.0 MHz	Murata Erie CSA16.00MX		± 0.5%
All resonators used did not have built-in capacitors.			

PRELIMINARY

TABLE 12-2: CAPACITOR SELECTION FOR CRYSTAL OSCILLATOR

Osc Type	Crystal Freq	Cap. Range C1	Cap. Range C2
LP	32 kHz	33 pF	33 pF
	200 kHz	15 pF	15 pF
XT	200 kHz	47-68 pF	47-68 pF
	1 MHz	15 pF	15 pF
	4 MHz	15 pF	15 pF
HS	4 MHz	15 pF	15 pF
	8 MHz	15-33 pF	15-33 pF
	20 MHz	15-33 pF	15-33 pF
These values are for design guidance only. See notes at bottom of page.			
Crystals Used			
32 kHz	Epson C-001R32.768K-A	± 20 PPM	
200 kHz	STD XTL 200.000KHz	± 20 PPM	
1 MHz	ECS ECS-10-13-1	± 50 PPM	
4 MHz	ECS ECS-40-20-1	± 50 PPM	
8 MHz	EPSON CA-301 8.000M-C	± 30 PPM	
20 MHz	EPSON CA-301 20.000M-C	± 30 PPM	

PRELIMINARY

Note 1: Higher capacitance increases the stability of oscillator, but also increases the start-up time.

2: Since each resonator/crystal has its own characteristics, the user should consult the resonator/crystal manufacturer for appropriate values of external components.

3: Rs may be required in HS mode, as well as XT mode, to avoid overdriving crystals with low drive level specification.

4: When migrating from other PICmicro devices, oscillator performance should be verified.

12.2.3 RC OSCILLATOR

For timing insensitive applications, the “RC” device option offers additional cost savings. The RC oscillator frequency is a function of the supply voltage, the resistor (REXT) and capacitor (CEXT) values, and the operating temperature. In addition to this, the oscillator frequency will vary from unit to unit due to normal process parameter variation. Furthermore, the difference in lead frame capacitance between package types will also affect the oscillation frequency, especially for low CEXT values. The user also needs to take into account variation due to tolerance of external R and C components used. Figure 12-3 shows how the R/C combination is connected to the PIC16F7X.

FIGURE 12-3: RC OSCILLATOR MODE

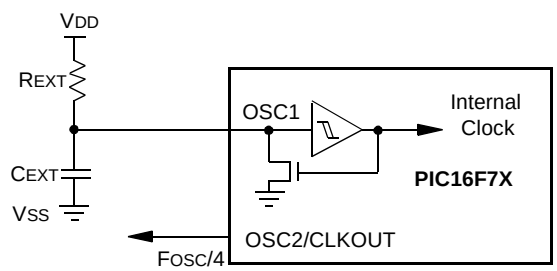

Recommended values: 3 kΩ ≤ REXT ≤ 100 kΩ
CEXT > 20pF

 © 2000 Microchip Technology Inc.

12.3 RESET

The PIC16F7X differentiates between various kinds of RESET:

- Power-on Reset (POR)
- $\overline{\text{MCLR}}$ Reset during normal operation
- $\overline{\text{MCLR}}$ Reset during SLEEP
- WDT Reset (during normal operation)
- WDT Wake-up (during SLEEP)
- Brown-out Reset (BOR)

Some registers are not affected in any RESET condition. Their status is unknown on POR and unchanged in any other RESET. Most other registers are reset to a "RESET state" on Power-on Reset (POR), on the $\overline{\text{MCLR}}$ and WDT Reset, on $\overline{\text{MCLR}}$ Reset during SLEEP, and Brown-out Reset (BOR). They are not affected by a WDT Wake-up, which is viewed as the resumption of normal operation. The $\overline{\text{TO}}$ and $\overline{\text{PD}}$ bits are set or cleared differently in different RESET situations, as indicated in Table 12-4. These bits are used in software to determine the nature of the RESET. See Table 12-6 for a full description of RESET states of all registers.

A simplified block diagram of the on-chip RESET circuit is shown in Figure 12-4.

These devices have a $\overline{\text{MCLR}}$ noise filter in the $\overline{\text{MCLR}}$ Reset path. The filter will detect and ignore small pulses.

It should be noted that a WDT Reset does not drive $\overline{\text{MCLR}}$ pin low.

FIGURE 12-4: SIMPLIFIED BLOCK DIAGRAM OF ON-CHIP RESET CIRCUIT

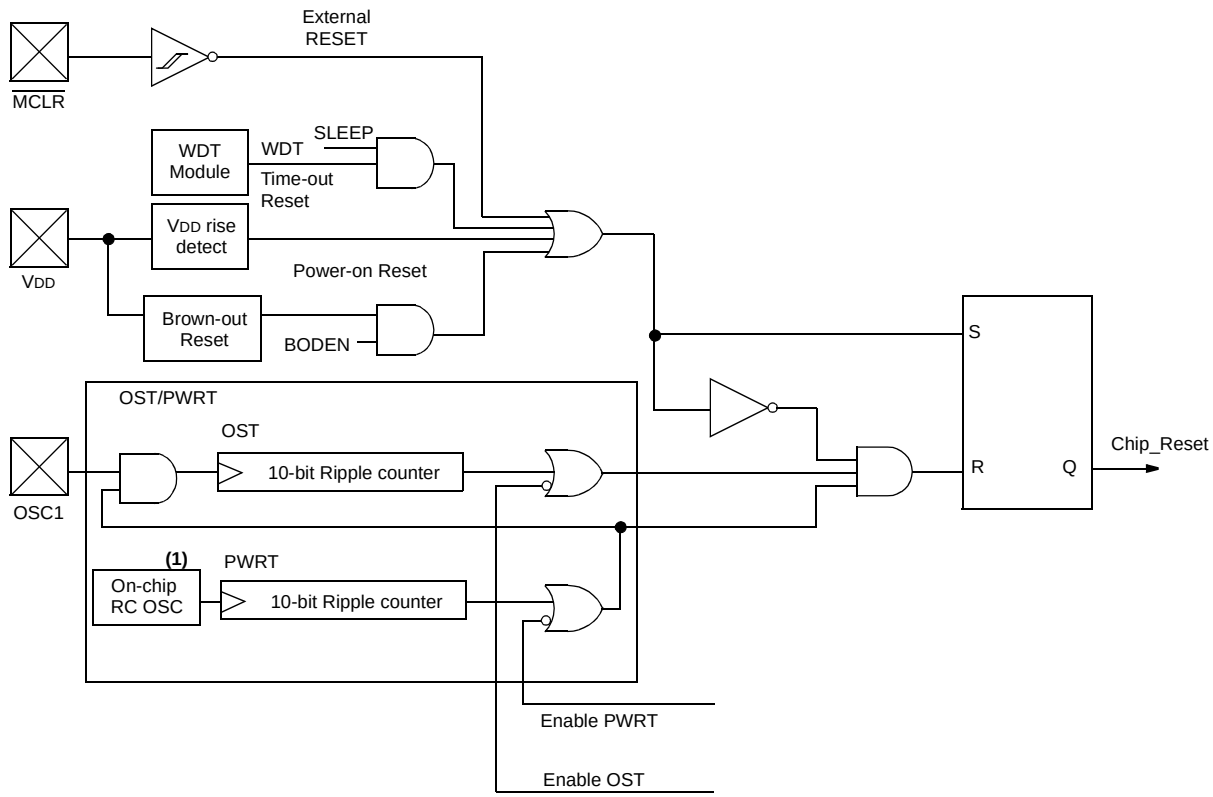

Note 1: This is a separate oscillator from the RC oscillator of the CLKIN pin.

12.4 Power-on Reset (POR)

A Power-on Reset pulse is generated on-chip when V_{DD} rise is detected (in the range of 1.2V - 1.7V). To take advantage of the POR, tie the $\overline{MCLR}$ pin directly (or through a resistor) to V_{DD}. This will eliminate external RC components usually needed to create a Power-on Reset. A maximum rise time for V_{DD} is specified. See Electrical Specifications for details.

When the device starts normal operation (exits the RESET condition), device operating parameters (voltage, frequency, temperature,...) must be met to ensure operation. If these conditions are not met, the device must be held in RESET until the operating conditions are met. Brown-out Reset may be used to meet the start-up conditions. For additional information, refer to Application Note, AN007, “Power-up Trouble Shooting”, (DS00007).

12.5 Power-up Timer (PWRT)

The Power-up Timer provides a fixed 72 ms nominal time-out on power-up only from the POR. The Power-up Timer operates on an internal RC oscillator. The chip is kept in RESET as long as the PWRT is active. The PWRT’s time delay allows V_{DD} to rise to an acceptable level. A configuration bit is provided to enable/disable the PWRT.

The power-up time delay will vary from chip to chip due to V_{DD}, temperature and process variation. See DC parameters for details (T_{PWRT}, parameter #33).

12.6 Oscillator Start-up Timer (OST)

The Oscillator Start-up Timer (OST) provides 1024 oscillator cycles (from OSC1 input) delay after the PWRT delay is over (if enabled). This helps to ensure that the crystal oscillator or resonator has started and stabilized.

The OST time-out is invoked only for XT, LP and HS modes and only on Power-on Reset or wake-up from SLEEP.

12.7 Brown-out Reset (BOR)

The configuration bit, BODEN, can enable or disable the Brown-out Reset circuit. If V_{DD} falls below V_{BOR} (parameter D005, about 4V) for longer than T_{BOR} (parameter #35, about 100µS), the brown-out situation will reset the device. If V_{DD} falls below V_{BOR} for less than T_{BOR}, a RESET may not occur.

Once the brown-out occurs, the device will remain in Brown-out Reset until V_{DD} rises above V_{BOR}. The Power-up Timer then keeps the device in RESET for T_{PWRT} (parameter #33, about 72mS). If V_{DD} should fall below V_{BOR} during T_{PWRT}, the Brown-out Reset process will restart when V_{DD} rises above V_{BOR}, with the Power-up Timer Reset. The Power-up Timer is always enabled when the Brown-out Reset circuit is enabled, regardless of the state of the PWRT configuration bit.

12.8 Time-out Sequence

On power-up, the time-out sequence is as follows: The PWRT delay starts (if enabled) when a POR Reset occurs. Then OST starts counting 1024 oscillator cycles when PWRT ends (LP, XT, HS). When the OST ends, the device comes out of RESET.

If $\overline{MCLR}$ is kept low long enough, the time-outs will expire. Bringing $\overline{MCLR}$ high will begin execution immediately. This is useful for testing purposes or to synchronize more than one PIC16F7X device operating in parallel.

Table 12-5 shows the RESET conditions for the STATUS, PCON and PC registers, while Table 12-6 shows the RESET conditions for all the registers.

12.9 Power Control/Status Register (PCON)

The Power Control/Status Register, PCON, has up to two bits depending upon the device.

Bit0 is Brown-out Reset Status bit, $\overline{BOR}$. Bit $\overline{BOR}$ is unknown on a Power-on Reset. It must then be set by the user and checked on subsequent RESETS to see if bit $\overline{BOR}$ cleared, indicating a Brown-out Reset occurred. When the Brown-out Reset is disabled, the state of the $\overline{BOR}$ bit is unpredictable and therefore, not valid at any time.

Bit1 is $\overline{POR}$ (Power-on Reset Status bit). It is cleared on a Power-on Reset and unaffected otherwise. The user must set this bit following a Power-on Reset.

 © 2000 Microchip Technology Inc.

TABLE 12-3: TIME-OUT IN VARIOUS SITUATIONS

Oscillator Configuration	Power-up		Brown-out	Wake-up from SLEEP
	$\overline{\text{PWRTE}}$ = 0	$\overline{\text{PWRTE}}$ = 1		
XT, HS, LP	72 ms + 1024TOSC	1024TOSC	72 ms + 1024TOSC	1024TOSC
RC	72 ms	—	72 ms	—

TABLE 12-4: STATUS BITS AND THEIR SIGNIFICANCE

POR	BOR	TO	PD	
0	x	1	1	Power-on Reset
0	x	0	x	Illegal, $\overline{\text{TO}}$ is set on $\overline{\text{POR}}$
0	x	x	0	Illegal, $\overline{\text{PD}}$ is set on $\overline{\text{POR}}$
1	0	1	1	Brown-out Reset
1	1	0	1	WDT Reset
1	1	0	0	WDT Wake-up
1	1	u	u	$\overline{\text{MCLR}}$ Reset during normal operation
1	1	1	0	$\overline{\text{MCLR}}$ Reset during SLEEP or interrupt wake-up from SLEEP

TABLE 12-5: RESET CONDITION FOR SPECIAL REGISTERS

Condition	Program Counter	STATUS Register	PCON Register
Power-on Reset	000h	0001 1xxx	---- --0x
$\overline{\text{MCLR}}$ Reset during normal operation	000h	000u uuuu	---- --uu
$\overline{\text{MCLR}}$ Reset during SLEEP	000h	0001 0uuu	---- --uu
WDT Reset	000h	0000 1uuu	---- --uu
WDT Wake-up	PC + 1	uuu0 0uuu	---- --uu
Brown-out Reset	000h	0001 1uuu	---- --u0
Interrupt wake-up from SLEEP	PC + 1(1)	uuu1 0uuu	---- --uu

Legend: u = unchanged, x = unknown, - = unimplemented bit read as '0'.

Note 1: When the wake-up is due to an interrupt and the GIE bit is set, the PC is loaded with the interrupt vector (0004h).

TABLE 12-6: INITIALIZATION CONDITIONS FOR ALL REGISTERS

Register	Devices				Power-on Reset, Brown-out Reset	$\overline{\text{MCLR}}$ Reset, WDT Reset	Wake-up via WDT or Interrupt
W	73	74	76	77	xxxx xxxx	uuuu uuuu	uuuu uuuu
INDF	73	74	76	77	N/A	N/A	N/A
TMR0	73	74	76	77	xxxx xxxx	uuuu uuuu	uuuu uuuu
PCL	73	74	76	77	0000h	0000h	PC + 1(2)
STATUS	73	74	76	77	0001 1xxx	000q quuu(3)	uuuq quuu(3)
FSR	73	74	76	77	xxxx xxxx	uuuu uuuu	uuuu uuuu
PORTA	73	74	76	77	--0x 0000	--0u 0000	--uu uuuu
PORTB	73	74	76	77	xxxx xxxx	uuuu uuuu	uuuu uuuu
PORTC	73	74	76	77	xxxx xxxx	uuuu uuuu	uuuu uuuu
PORTD	73	74	76	77	xxxx xxxx	uuuu uuuu	uuuu uuuu
PORTE	73	74	76	77	---- -xxx	---- -uuu	---- -uuu
PCLATH	73	74	76	77	---0 0000	---0 0000	---u uuuu
INTCON	73	74	76	77	0000 000x	0000 000u	uuuu uuuu(1)
PIR1	73	74	76	77	r000 0000	r000 0000	ruuu uuuu(1)
	73	74	76	77	0000 0000	0000 0000	uuuu uuuu(1)
PIR2	73	74	76	77	---- ---0	---- ---0	---- ---u(1)
TMR1L	73	74	76	77	xxxx xxxx	uuuu uuuu	uuuu uuuu
TMR1H	73	74	76	77	xxxx xxxx	uuuu uuuu	uuuu uuuu
T1CON	73	74	76	77	--00 0000	--uu uuuu	--uu uuuu
TMR2	73	74	76	77	0000 0000	0000 0000	uuuu uuuu
T2CON	73	74	76	77	-000 0000	-000 0000	-uuu uuuu
SSPBUF	73	74	76	77	xxxx xxxx	uuuu uuuu	uuuu uuuu
SSPCON	73	74	76	77	0000 0000	0000 0000	uuuu uuuu
CCPR1L	73	74	76	77	xxxx xxxx	uuuu uuuu	uuuu uuuu
CCPR1H	73	74	76	77	xxxx xxxx	uuuu uuuu	uuuu uuuu
CCP1CON	73	74	76	77	--00 0000	--00 0000	--uu uuuu
RCSTA	73	74	76	77	0000 -00x	0000 -00x	uuuu -uuu
TXREG	73	74	76	77	0000 0000	0000 0000	uuuu uuuu
RCREG	73	74	76	77	0000 0000	0000 0000	uuuu uuuu
CCPR2L	73	74	76	77	xxxx xxxx	uuuu uuuu	uuuu uuuu
CCPR2H	73	74	76	77	xxxx xxxx	uuuu uuuu	uuuu uuuu
CCP2CON	73	74	76	77	0000 0000	0000 0000	uuuu uuuu
ADRES	73	74	76	77	xxxx xxxx	uuuu uuuu	uuuu uuuu
ADCON0	73	74	76	77	0000 00-0	0000 00-0	uuuu uu-u
OPTION_REG	73	74	76	77	1111 1111	1111 1111	uuuu uuuu
TRISA	73	74	76	77	--11 1111	--11 1111	--uu uuuu
TRISB	73	74	76	77	1111 1111	1111 1111	uuuu uuuu
TRISC	73	74	76	77	1111 1111	1111 1111	uuuu uuuu
TRISD	73	74	76	77	1111 1111	1111 1111	uuuu uuuu
TRISE	73	74	76	77	0000 -111	0000 -111	uuuu -uuu
PIE1	73	74	76	77	r000 0000	r000 0000	ruuu uuuu
	73	74	76	77	0000 0000	0000 0000	uuuu uuuu
PIE2	73	74	76	77	---- ---0	---- ---0	---- ---u

Legend: u = unchanged, x = unknown, - = unimplemented bit, read as '0', q = value depends on condition, r = reserved maintain clear.

Note 1: One or more bits in INTCON, PIR1 and/or PIR2 will be affected (to cause wake-up).

2: When the wake-up is due to an interrupt and the GIE bit is set, the PC is loaded with the interrupt vector (0004h).

3: See Table 12-5 for RESET value for specific condition.

 © 2000 Microchip Technology Inc.

TABLE 12-6: INITIALIZATION CONDITIONS FOR ALL REGISTERS (CONTINUED)

Register	Devices				Power-on Reset, Brown-out Reset	$\overline{\text{MCLR}}$ Reset, WDT Reset	Wake-up via WDT or Interrupt
PCON	73	74	76	77	---- --qq	---- --uu	---- --uu
PR2	73	74	76	77	1111 1111	1111 1111	1111 1111
SSPSTAT	73	74	76	77	--00 0000	--00 0000	--uu uuuu
SSPADD	73	74	76	77	0000 0000	0000 0000	uuuu uuuu
TXSTA	73	74	76	77	0000 -010	0000 -010	uuuu -uuu
SPBRG	73	74	76	77	0000 0000	0000 0000	uuuu uuuu
ADCON1	73	74	76	77	---- -000	---- -000	---- -uuu
PMDATA	73	74	76	77	0--- 0000	0--- 0000	u--- uuuu
PMADR	73	74	76	77	xxxx xxxx	uuuu uuuu	uuuu uuuu
PMDATH	73	74	76	77	xxxx xxxx	uuuu uuuu	uuuu uuuu
PMADRH	73	74	76	77	xxxx xxxx	uuuu uuuu	uuuu uuuu
PMCON1	73	74	76	77	1--- ---0	1--- ---0	1--- ---u

Legend: u = unchanged, x = unknown, - = unimplemented bit, read as '0', q = value depends on condition, r = reserved maintain clear.

Note 1: One or more bits in INTCON, PIR1 and/or PIR2 will be affected (to cause wake-up).

2: When the wake-up is due to an interrupt and the GIE bit is set, the PC is loaded with the interrupt vector (0004h).

3: See Table 12-5 for RESET value for specific condition.

FIGURE 12-5: TIME-OUT SEQUENCE ON POWER-UP ($\overline{\text{MCLR}}$ TIED TO V_{DD})

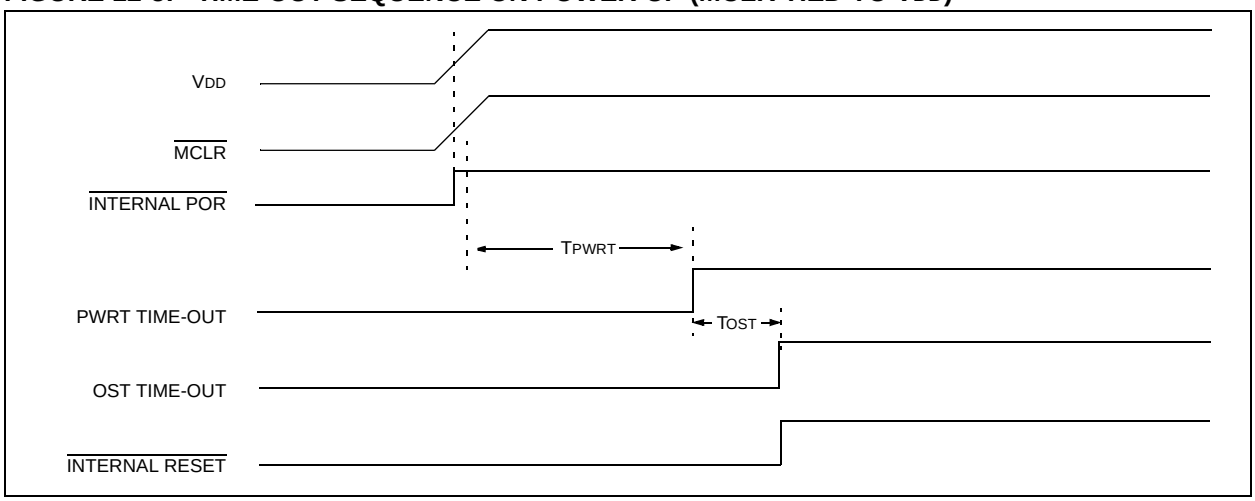

FIGURE 12-6: TIME-OUT SEQUENCE ON POWER-UP ($\overline{\text{MCLR}}$ NOT TIED TO VDD): CASE 1

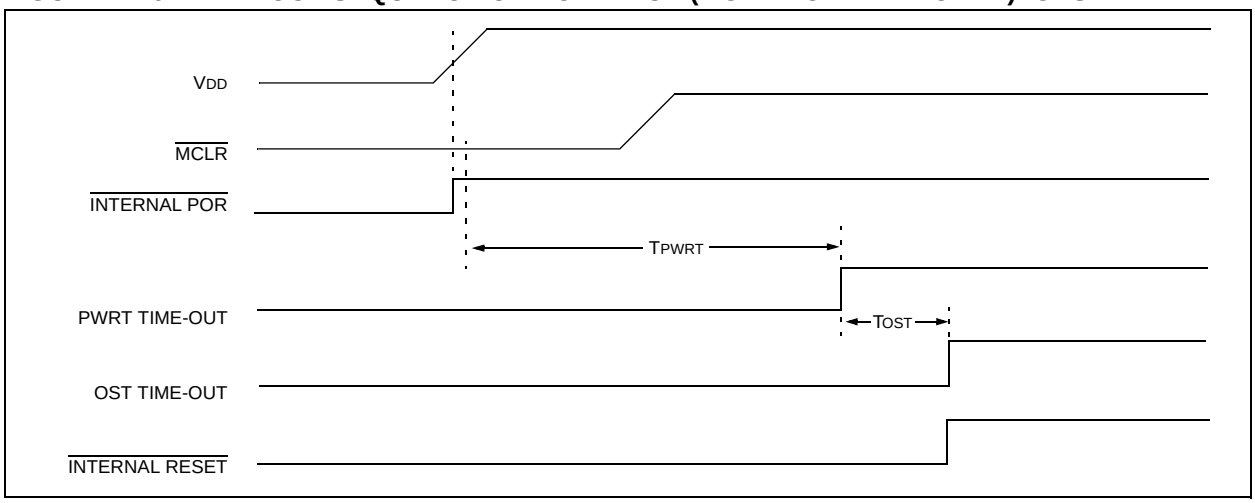

FIGURE 12-7: TIME-OUT SEQUENCE ON POWER-UP ($\overline{\text{MCLR}}$ NOT TIED TO VDD): CASE 2

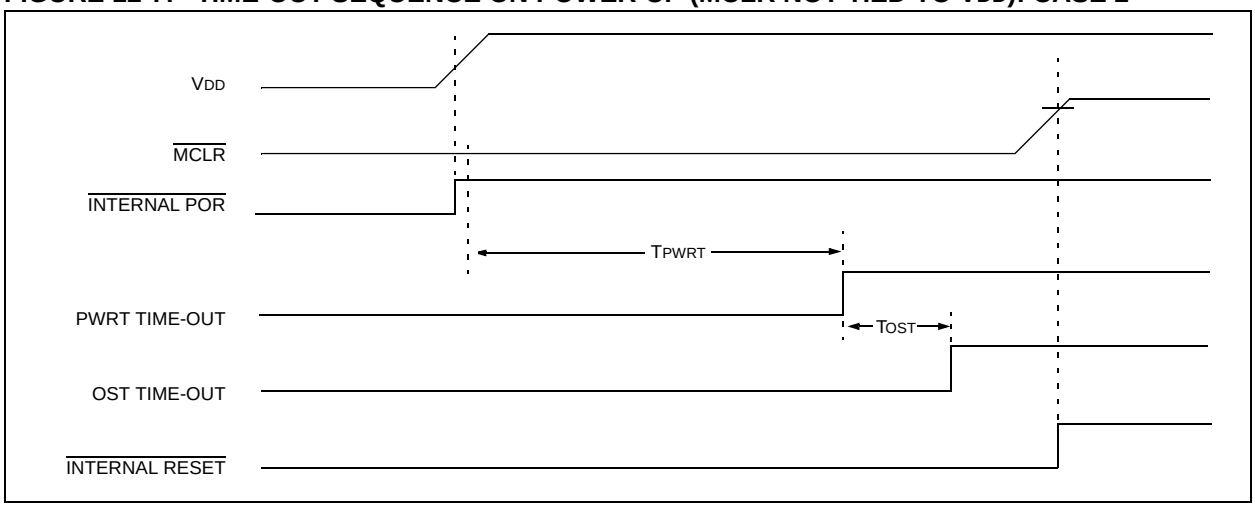

FIGURE 12-8: SLOW RISE TIME ($\overline{\text{MCLR}}$ TIED TO VDD)

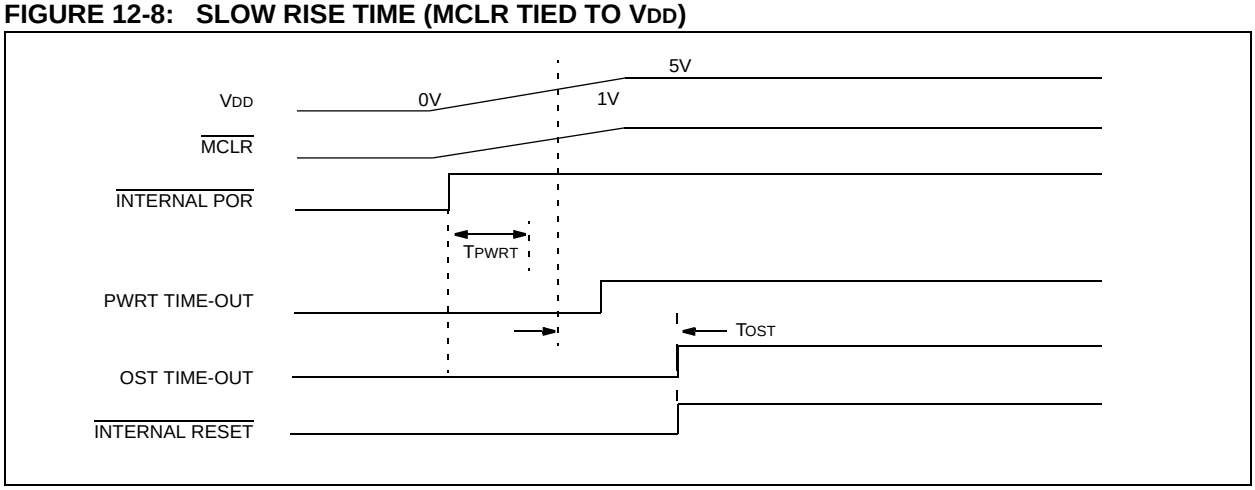

 © 2000 Microchip Technology Inc.

12.10 Interrupts

The PIC16F7X family has up to 12 sources of interrupt. The interrupt control register (INTCON) records individual interrupt requests in flag bits. It also has individual and global interrupt enable bits.

Note:	Individual interrupt flag bits are set, regardless of the status of their corresponding mask bit or the GIE bit.

A global interrupt enable bit, GIE (INTCON<7>) enables (if set) all un-masked interrupts, or disables (if cleared) all interrupts. When bit GIE is enabled, and an interrupt's flag bit and mask bit are set, the interrupt will vector immediately. Individual interrupts can be disabled through their corresponding enable bits in various registers. Individual interrupt bits are set regardless of the status of the GIE bit. The GIE bit is cleared on RESET.

The "return from interrupt" instruction, `RETFIE`, exits the interrupt routine, as well as sets the GIE bit, which re-enables interrupts.

The RB0/INT pin interrupt, the RB port change interrupt and the TMR0 overflow interrupt flags are contained in the INTCON register.

The peripheral interrupt flags are contained in the Special Function Registers, PIR1 and PIR2. The corresponding interrupt enable bits are contained in Special Function Registers, PIE1 and PIE2, and the peripheral interrupt enable bit is contained in Special Function Register INTCON.

When an interrupt is responded to, the GIE bit is cleared to disable any further interrupt, the return address is pushed onto the stack and the PC is loaded with 0004h. Once in the Interrupt Service Routine, the source(s) of the interrupt can be determined by polling the interrupt flag bits. The interrupt flag bit(s) must be cleared in software before re-enabling interrupts to avoid recursive interrupts.

For external interrupt events, such as the INT pin or PORTB change interrupt, the interrupt latency will be three or four instruction cycles. The exact latency depends when the interrupt event occurs. The latency is the same for one or two cycle instructions. Individual interrupt flag bits are set, regardless of the status of their corresponding mask bit, PEIE bit, or the GIE bit.

FIGURE 12-9: INTERRUPT LOGIC

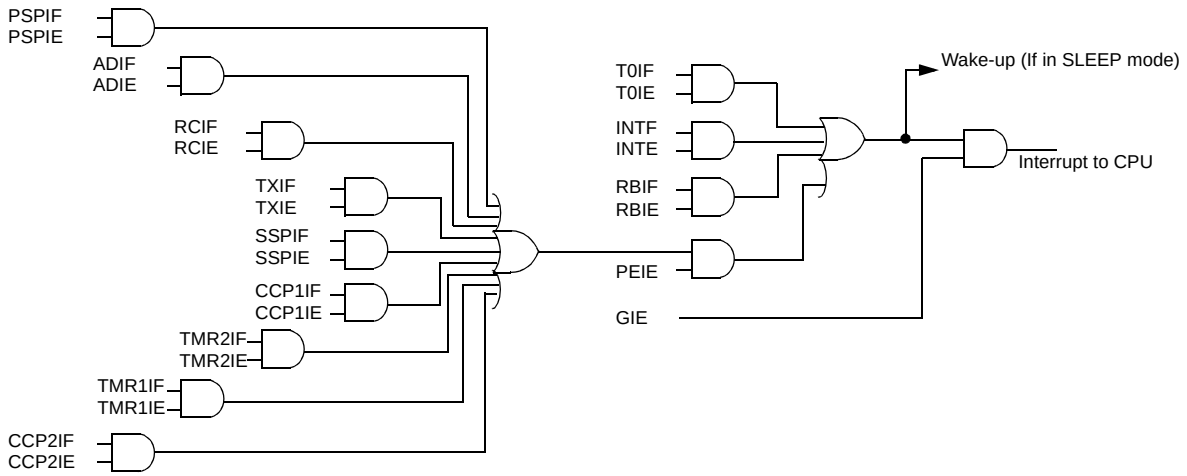

The following table shows which devices have which interrupts.

Device	T0IF	INTF	RBIF	PSPIF	ADIF	RCIF	TXIF	SSPIF	CCP1IF	TMR2IF	TMR1IF	CCP2IF
PIC16F76/73	Yes	Yes	Yes	-	Yes	Yes	Yes	Yes	Yes	Yes	Yes	Yes
PIC16F77/74	Yes	Yes	Yes	Yes	Yes	Yes	Yes	Yes	Yes	Yes	Yes	Yes

12.10.1 INT INTERRUPT

External interrupt on the RB0/INT pin is edge triggered, either rising, if bit INTEDG (OPTION_REG<6>) is set, or falling, if the INTEDG bit is clear. When a valid edge appears on the RB0/INT pin, flag bit INTF (INTCON<1>) is set. This interrupt can be disabled by clearing enable bit INTE (INTCON<4>). Flag bit INTF must be cleared in software in the Interrupt Service Routine before re-enabling this interrupt. The INT interrupt can wake-up the processor from SLEEP, if bit INTE was set prior to going into SLEEP. The status of global interrupt enable bit GIE decides whether or not the processor branches to the interrupt vector following wake-up. See Section 12.13 for details on SLEEP mode.

12.10.2 TMR0 INTERRUPT

An overflow (FFh → 00h) in the TMR0 register will set flag bit T0IF (INTCON<2>). The interrupt can be enabled/disabled by setting/clearing enable bit T0IE (INTCON<5>). (Section 5.0)

12.10.3 PORTB INTCON CHANGE

An input change on PORTB<7:4> sets flag bit RBIF (INTCON<0>). The interrupt can be enabled/disabled by setting/clearing enable bit RBIE (INTCON<4>). (Section 3.2)

12.11 Context Saving During Interrupts

During an interrupt, only the return PC value is saved on the stack. Typically, users may wish to save key registers during an interrupt (i.e., W register and STATUS register). This will have to be implemented in software.

For the PIC16F73/74 devices, the register W_TEMP must be defined in both banks 0 and 1 and must be defined at the same offset from the bank base address (i.e., If W_TEMP is defined at 0x20 in bank 0, it must also be defined at 0xA0 in bank 1.). The registers, PCLATH_TEMP and STATUS_TEMP, are only defined in bank 0.

Since the upper 16 bytes of each bank are common in the PIC16F76/77 devices, temporary holding registers W_TEMP, STATUS_TEMP and PCLATH_TEMP should be placed in here. These 16 locations don't require banking and therefore, make it easier for context save and restore. The same code shown in Example 12-1 can be used.

EXAMPLE 12-1: SAVING STATUS, W, AND PCLATH REGISTERS IN RAM

```
MOVWF    W_TEMP           ;Copy W to TEMP register
SWAPF    STATUS,W         ;Swap status to be saved into W
CLRF     STATUS           ;bank 0, regardless of current bank, Clears IRP,RP1,RP0
MOVWF    STATUS_TEMP      ;Save status to bank zero STATUS_TEMP register
MOVF     PCLATH, W        ;Only required if using pages 1, 2 and/or 3
MOVWF    PCLATH_TEMP      ;Save PCLATH into W
CLRF     PCLATH           ;Page zero, regardless of current page
:
:(ISR)                    ;Insert user code here
:
MOVF     PCLATH_TEMP, W   ;Restore PCLATH
MOVWF    PCLATH           ;Move W into PCLATH
SWAPF    STATUS_TEMP,W    ;Swap STATUS_TEMP register into W
                          ;(sets bank to original state)
MOVWF    STATUS           ;Move W into STATUS register
SWAPF    W_TEMP,F         ;Swap W_TEMP
SWAPF    W_TEMP,W         ;Swap W_TEMP into W
```

 © 2000 Microchip Technology Inc.

12.12 Watchdog Timer (WDT)

The Watchdog Timer is as a free running on-chip RC oscillator which does not require any external components. This RC oscillator is separate from the RC oscillator of the OSC1/CLKIN pin. That means that the WDT will run, even if the clock on the OSC1/CLKIN and OSC2/CLKOUT pins of the device has been stopped, for example, by execution of a `SLEEP` instruction.

During normal operation, a WDT time-out generates a device RESET (Watchdog Timer Reset). If the device is in SLEEP mode, a WDT time-out causes the device to wake-up and continue with normal operation (Watchdog Timer Wake-up). The $\overline{TO}$ bit in the STATUS register will be cleared upon a Watchdog Timer time-out.

The WDT can be permanently disabled by clearing configuration bit WDTE (Section 12.1).

WDT time-out period values may be found in the Electrical Specifications section under parameter #31. Values for the WDT prescaler (actually a postscaler, but shared with the Timer0 prescaler) may be assigned using the OPTION_REG register.

Note:	The `CLRWDT` and `SLEEP` instructions clear the WDT and the postscaler, if assigned to the WDT, and prevent it from timing out and generating a device RESET condition.

.

Note:	When a `CLRWDT` instruction is executed and the prescaler is assigned to the WDT, the prescaler count will be cleared, but the prescaler assignment is not changed.

FIGURE 12-10: WATCHDOG TIMER BLOCK DIAGRAM

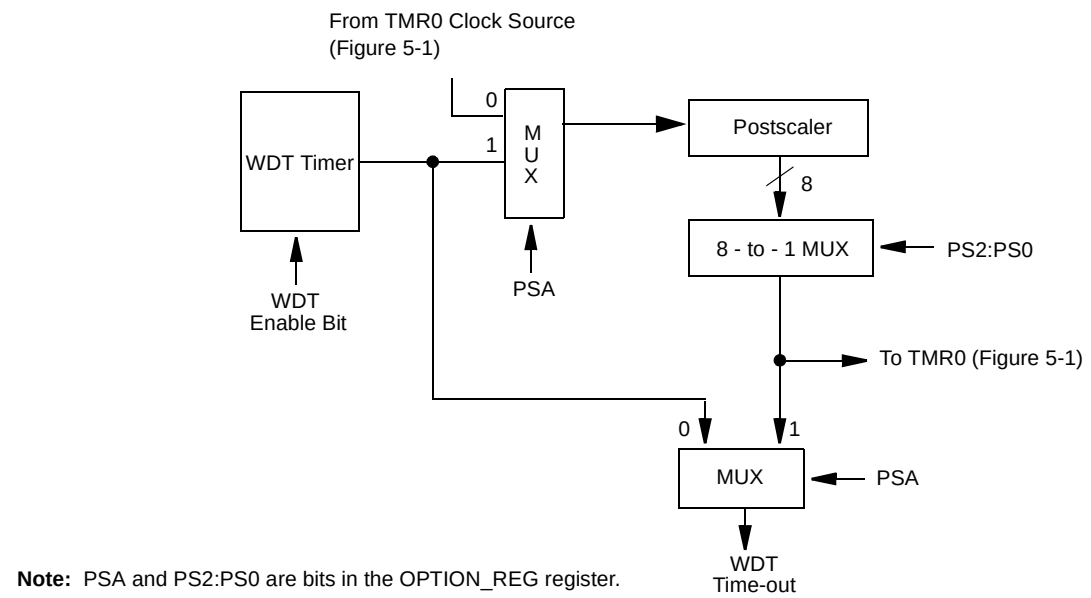

Note: PSA and PS2:PS0 are bits in the OPTION_REG register.

TABLE 12-7: SUMMARY OF WATCHDOG TIMER REGISTERS

Address	Name	Bit 7	Bit 6	Bit 5	Bit 4	Bit 3	Bit 2	Bit 1	Bit 0
2007h	Config. bits	(1)	BODEN(1)	—	CP0	$\overline{PWRTE}$(1)	WDTE	FOSC1	FOSC0
81h,181h	OPTION_REG	$\overline{RBPU}$	INTEDG	T0CS	T0SE	PSA	PS2	PS1	PS0

Legend: Shaded cells are not used by the Watchdog Timer.
Note 1: See Register 12-1 for operation of these bits.

12.13 Power-down Mode (SLEEP)

Power-down mode is entered by executing a SLEEP instruction.

If enabled, the Watchdog Timer will be cleared but keeps running, the $\overline{PD}$ bit (STATUS<3>) is cleared, the $\overline{TO}$ (STATUS<4>) bit is set, and the oscillator driver is turned off. The I/O ports maintain the status they had before the SLEEP instruction was executed (driving high, low, or hi-impedance).

For lowest current consumption in this mode, place all I/O pins at either V_{DD} or V_{SS}, ensure no external circuitry is drawing current from the I/O pin, power-down the A/D and disable external clocks. Pull all I/O pins that are hi-impedance inputs, high or low externally, to avoid switching currents caused by floating inputs. The T0CKI input should also be at V_{DD} or V_{SS} for lowest current consumption. The contribution from on-chip pull-ups on PORTB should also be considered.

The $\overline{MCLR}$ pin must be at a logic high level (V_{IHMC}).

12.13.1 WAKE-UP FROM SLEEP

The device can wake up from SLEEP through one of the following events:

1. External RESET input on $\overline{MCLR}$ pin.
2. Watchdog Timer wake-up (if WDT was enabled).
3. Interrupt from INT pin, RB port change or a Peripheral Interrupt.

External $\overline{MCLR}$ Reset will cause a device RESET. All other events are considered a continuation of program execution and cause a "wake-up". The $\overline{TO}$ and $\overline{PD}$ bits in the STATUS register can be used to determine the cause of device RESET. The $\overline{PD}$ bit, which is set on power-up, is cleared when SLEEP is invoked. The $\overline{TO}$ bit is cleared if a WDT time-out occurred and caused wake-up.

The following peripheral interrupts can wake the device from SLEEP:

1. PSP read or write (PIC16F74/77 only).
2. TMR1 interrupt. Timer1 must be operating as an asynchronous counter.
3. CCP Capture mode interrupt.
4. Special event trigger (Timer1 in Asynchronous mode using an external clock).
5. SSP (START/STOP) bit detect interrupt.
6. SSP transmit or receive in Slave mode (SPI/I^2C).
7. USART RX or TX (Synchronous Slave mode).
8. A/D conversion (when A/D clock source is RC).

Other peripherals cannot generate interrupts since during SLEEP, no on-chip clocks are present.

When the SLEEP instruction is being executed, the next instruction (PC + 1) is pre-fetched. For the device to wake-up through an interrupt event, the corresponding interrupt enable bit must be set (enabled). Wake-up is regardless of the state of the GIE bit. If the GIE bit is clear (disabled), the device continues execution at the instruction after the SLEEP instruction. If the GIE bit is set (enabled), the device executes the instruction after the SLEEP instruction and then branches to the interrupt address (0004h). In cases where the execution of the instruction following SLEEP is not desirable, the user should have a NOP after the SLEEP instruction.

12.13.2 WAKE-UP USING INTERRUPTS

When global interrupts are disabled (GIE cleared) and any interrupt source has both its interrupt enable bit and interrupt flag bit set, one of the following will occur:

- If the interrupt occurs **before** the execution of a SLEEP instruction, the SLEEP instruction will complete as a NOP. Therefore, the WDT and WDT postscaler will not be cleared, the $\overline{TO}$ bit will not be set and $\overline{PD}$ bits will not be cleared.
- If the interrupt occurs **during or after** the execution of a SLEEP instruction, the device will immediately wake-up from SLEEP. The SLEEP instruction will be completely executed before the wake-up. Therefore, the WDT and WDT postscaler will be cleared, the $\overline{TO}$ bit will be set and the $\overline{PD}$ bit will be cleared.

Even if the flag bits were checked before executing a SLEEP instruction, it may be possible for flag bits to become set before the SLEEP instruction completes. To determine whether a SLEEP instruction executed, test the $\overline{PD}$ bit. If the $\overline{PD}$ bit is set, the SLEEP instruction was executed as a NOP.

To ensure that the WDT is cleared, a CLRWDT instruction should be executed before a SLEEP instruction.

 © 2000 Microchip Technology Inc.

FIGURE 12-11: WAKE-UP FROM SLEEP THROUGH INTERRUPT

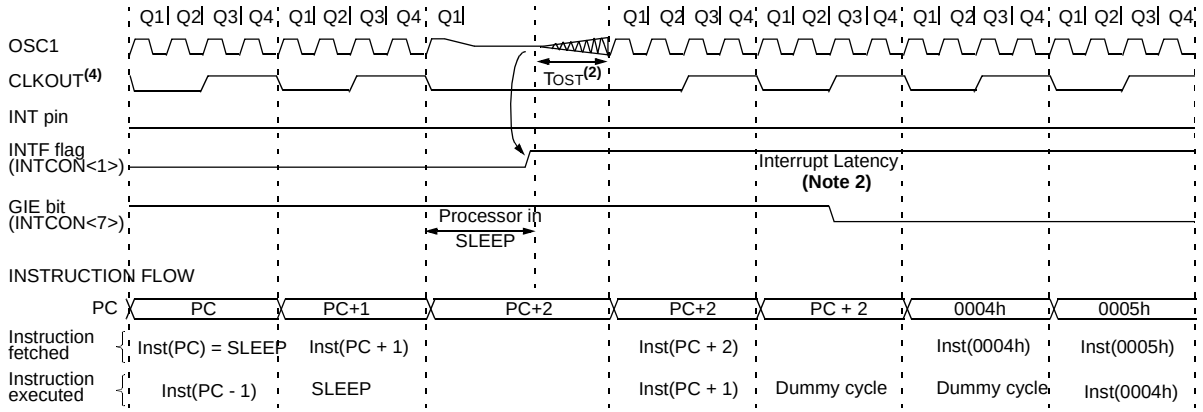

Note 1: XT, HS or LP oscillator mode assumed.
2: TOST = 1024TOSC (drawing not to scale) This delay will not be there for RC osc mode.
3: GIE = '1' assumed. In this case after wake- up, the processor jumps to the interrupt routine. If GIE = '0', execution will continue in-line.
4: CLKOUT is not available in these osc modes, but shown here for timing reference.

12.14 Program Verification/Code Protection

If the code protection bit(s) have not been programmed, the on-chip program memory can be read out for verification purposes.

12.15 ID Locations

Four memory locations (2000h - 2003h) are designated as ID locations, where the user can store checksum or other code identification numbers. These locations are not accessible during normal execution, but are readable and writable during program/verify. It is recommended that only the 4 least significant bits of the ID location are used.

12.16 In-Circuit Serial Programming

PIC16F7X microcontrollers can be serially programmed while in the end application circuit. This is simply done with two lines for clock and data and three other lines for power, ground, and the programming voltage. This allows customers to manufacture boards with unprogrammed devices, and then program the microcontroller just before shipping the product. This also allows the most recent firmware or a custom firmware to be programmed.

For complete details of serial programming, please refer to the In-Circuit Serial Programming (ICSP™) Guide, (DS30277).

 © 2000 Microchip Technology Inc.

13.0 INSTRUCTION SET SUMMARY

Each PIC16F7X instruction is a 14-bit word divided into an OPCODE, which specifies the instruction type and one or more operands, which further specify the operation of the instruction. The PIC16F7X instruction set summary in Table 13-2 lists **byte-oriented**, **bit-oriented**, and **literal and control** operations. Table 13-1 shows the opcode field descriptions.

For **byte-oriented** instructions, 'f' represents a file register designator and 'd' represents a destination designator. The file register designator specifies which file register is to be used by the instruction.

The destination designator specifies where the result of the operation is to be placed. If 'd' is zero, the result is placed in the W register. If 'd' is one, the result is placed in the file register specified in the instruction.

For **bit-oriented** instructions, 'b' represents a bit field designator which selects the number of the bit affected by the operation, while 'f' represents the address of the file in which the bit is located.

For **literal and control** operations, 'k' represents an eight or eleven bit constant or literal value.

TABLE 13-1: OPCODE FIELD DESCRIPTIONS

Field	Description
f	Register file address (0x00 to 0x7F)
W	Working register (accumulator)
b	Bit address within an 8-bit file register
k	Literal field, constant data or label
x	Don't care location (= 0 or 1) The assembler will generate code with x = 0. It is the recommended form of use for compatibility with all Microchip software tools.
d	Destination select; d = 0: store result in W, d = 1: store result in file register f. Default is d = 1
PC	Program Counter
TO	Time-out bit
PD	Power-down bit

The instruction set is highly orthogonal and is grouped into three basic categories:

- **Byte-oriented** operations
- **Bit-oriented** operations
- **Literal and control** operations

All instructions are executed within one single instruction cycle, unless a conditional test is true or the program counter is changed as a result of an instruction. In this case, the execution takes two instruction cycles with the second cycle executed as a NOP. One instruction cycle consists of four oscillator periods. Thus, for an oscillator frequency of 4 MHz, the normal instruction execution time is 1 µs. If a conditional test is true or the program counter is changed as a result of an instruction, the instruction execution time is 2 µs.

Table 13-2 lists the instructions recognized by the MPASM assembler.

Figure 13-1 shows the general formats that the instructions can have.

> **Note:** To maintain upward compatibility with future PIC16F7X products, do not use the OPTION and TRIS instructions.

All examples use the following format to represent a hexadecimal number:

0xhh

where h signifies a hexadecimal digit.

FIGURE 13-1: GENERAL FORMAT FOR INSTRUCTIONS

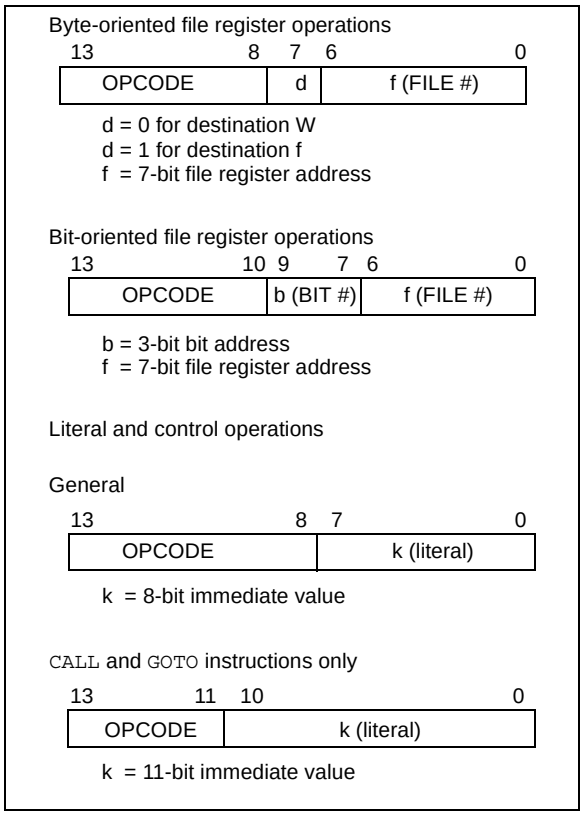

A description of each instruction is available in the PICmicro™ Mid-Range Reference Manual, (DS33023).

TABLE 13-2: PIC16F7X INSTRUCTION SET

Mnemonic, Operands		Description	Cycles	14-Bit Opcode MSb			LSb	Status Affected	Notes
BYTE-ORIENTED FILE REGISTER OPERATIONS									
ADDWF	f, d	Add W and f	1	00	0111	dfff	ffff	C,DC,Z	1,2
ANDWF	f, d	AND W with f	1	00	0101	dfff	ffff	Z	1,2
CLRF	f	Clear f	1	00	0001	1fff	ffff	Z	2
CLRW	-	Clear W	1	00	0001	0xxx	xxxx	Z	
COMF	f, d	Complement f	1	00	1001	dfff	ffff	Z	1,2
DECF	f, d	Decrement f	1	00	0011	dfff	ffff	Z	1,2
DECFSZ	f, d	Decrement f, Skip if 0	1(2)	00	1011	dfff	ffff		1,2,3
INCF	f, d	Increment f	1	00	1010	dfff	ffff	Z	1,2
INCFSZ	f, d	Increment f, Skip if 0	1(2)	00	1111	dfff	ffff		1,2,3
IORWF	f, d	Inclusive OR W with f	1	00	0100	dfff	ffff	Z	1,2
MOVF	f, d	Move f	1	00	1000	dfff	ffff	Z	1,2
MOVWF	f	Move W to f	1	00	0000	1fff	ffff		
NOP	-	No Operation	1	00	0000	0xx0	0000		
RLF	f, d	Rotate Left f through Carry	1	00	1101	dfff	ffff	C	1,2
RRF	f, d	Rotate Right f through Carry	1	00	1100	dfff	ffff	C	1,2
SUBWF	f, d	Subtract W from f	1	00	0010	dfff	ffff	C,DC,Z	1,2
SWAPF	f, d	Swap nibbles in f	1	00	1110	dfff	ffff		1,2
XORWF	f, d	Exclusive OR W with f	1	00	0110	dfff	ffff	Z	1,2
BIT-ORIENTED FILE REGISTER OPERATIONS									
BCF	f, b	Bit Clear f	1	01	00bb	bfff	ffff		1,2
BSF	f, b	Bit Set f	1	01	01bb	bfff	ffff		1,2
BTFSC	f, b	Bit Test f, Skip if Clear	1 (2)	01	10bb	bfff	ffff		3
BTFSS	f, b	Bit Test f, Skip if Set	1 (2)	01	11bb	bfff	ffff		3
LITERAL AND CONTROL OPERATIONS									
ADDLW	k	Add literal and W	1	11	111x	kkkk	kkkk	C,DC,Z	
ANDLW	k	AND literal with W	1	11	1001	kkkk	kkkk	Z	
CALL	k	Call subroutine	2	10	0kkk	kkkk	kkkk		
CLRWDT	-	Clear Watchdog Timer	1	00	0000	0110	0100	$\overline{TO}$,$\overline{PD}$	
GOTO	k	Go to address	2	10	1kkk	kkkk	kkkk		
IORLW	k	Inclusive OR literal with W	1	11	1000	kkkk	kkkk	Z	
MOVLW	k	Move literal to W	1	11	00xx	kkkk	kkkk		
RETFIE	-	Return from interrupt	2	00	0000	0000	1001		
RETLW	k	Return with literal in W	2	11	01xx	kkkk	kkkk		
RETURN	-	Return from Subroutine	2	00	0000	0000	1000		
SLEEP	-	Go into standby mode	1	00	0000	0110	0011	$\overline{TO}$,$\overline{PD}$	
SUBLW	k	Subtract W from literal	1	11	110x	kkkk	kkkk	C,DC,Z	
XORLW	k	Exclusive OR literal with W	1	11	1010	kkkk	kkkk	Z	

Note 1: When an I/O register is modified as a function of itself (e.g., `MOVF PORTB, 1`), the value used will be that value present on the pins themselves. For example, if the data latch is '1' for a pin configured as input and is driven low by an external device, the data will be written back with a '0'.

2: If this instruction is executed on the TMR0 register (and, where applicable, d = 1), the prescaler will be cleared if assigned to the Timer0 Module.

3: If Program Counter (PC) is modified or a conditional test is true, the instruction requires two cycles. The second cycle is executed as a `NOP`.

Note: Additional information on the mid-range instruction set is available in the PICmicro™ Mid-Range MCU Family Reference Manual (DS33023).

 © 2000 Microchip Technology Inc.

13.1 Instruction Descriptions

ADDLW	Add Literal and W
Syntax:	[*label*] ADDLW k
Operands:	$0 \le k \le 255$
Operation:	(W) + k → (W)
Status Affected:	C, DC, Z
Description:	The contents of the W register are added to the eight bit literal 'k' and the result is placed in the W register.

ADDWF	Add W and f
Syntax:	[*label*] ADDWF f,d
Operands:	$0 \le f \le 127$ $d \in [0,1]$
Operation:	(W) + (f) → (destination)
Status Affected:	C, DC, Z
Description:	Add the contents of the W register with register 'f'. If 'd' is 0, the result is stored in the W register. If 'd' is 1, the result is stored back in register 'f'.

ANDLW	AND Literal with W
Syntax:	[*label*] ANDLW k
Operands:	$0 \le k \le 255$
Operation:	(W) .AND. (k) → (W)
Status Affected:	Z
Description:	The contents of W register are AND'ed with the eight bit literal 'k'. The result is placed in the W register.

ANDWF	AND W with f
Syntax:	[*label*] ANDWF f,d
Operands:	$0 \le f \le 127$ $d \in [0,1]$
Operation:	(W) .AND. (f) → (destination)
Status Affected:	Z
Description:	AND the W register with register 'f'. If 'd' is 0, the result is stored in the W register. If 'd' is 1, the result is stored back in register 'f'.

BCF	Bit Clear f
Syntax:	[*label*] BCF f,b
Operands:	$0 \le f \le 127$ $0 \le b \le 7$
Operation:	0 → (f<b>)
Status Affected:	None
Description:	Bit 'b' in register 'f' is cleared.

BSF	Bit Set f
Syntax:	[*label*] BSF f,b
Operands:	$0 \le f \le 127$ $0 \le b \le 7$
Operation:	1 → (f<b>)
Status Affected:	None
Description:	Bit 'b' in register 'f' is set.

BTFSS	Bit Test f, Skip if Set
Syntax:	[*label*] BTFSS f,b
Operands:	$0 \le f \le 127$ $0 \le b < 7$
Operation:	skip if (f<b>) = 1
Status Affected:	None
Description:	If bit 'b' in register 'f' is '0', the next instruction is executed. If bit 'b' is '1', then the next instruction is discarded and a NOP is executed instead making this a 2TCY instruction.

BTFSC	Bit Test, Skip if Clear
Syntax:	[*label*] BTFSC f,b
Operands:	$0 \le f \le 127$ $0 \le b \le 7$
Operation:	skip if (f<b>) = 0
Status Affected:	None
Description:	If bit 'b' in register 'f' is '1', the next instruction is executed. If bit 'b', in register 'f', is '0', the next instruction is discarded, and a NOP is executed instead, making this a 2TCY instruction.

CALL	Call Subroutine
Syntax:	[*label*] CALL k
Operands:	$0 \le k \le 2047$
Operation:	(PC) + 1 → TOS, k → PC<10:0>, (PCLATH<4:3>) → PC<12:11>
Status Affected:	None
Description:	Call Subroutine. First, return address (PC+1) is pushed onto the stack. The eleven bit immediate address is loaded into PC bits <10:0>. The upper bits of the PC are loaded from PCLATH. CALL is a two cycle instruction.

CLRF	Clear f
Syntax:	[*label*] CLRF f
Operands:	$0 \le f \le 127$
Operation:	00h → (f) 1 → Z
Status Affected:	Z
Description:	The contents of register 'f' are cleared and the Z bit is set.

CLRW	Clear W
Syntax:	[*label*] CLRW
Operands:	None
Operation:	00h → (W) 1 → Z
Status Affected:	Z
Description:	W register is cleared. Zero bit (Z) is set.

CLRWDT	Clear Watchdog Timer
Syntax:	[*label*] CLRWDT
Operands:	None
Operation:	00h → WDT 0 → WDT prescaler, 1 → $\overline{TO}$ 1 → $\overline{PD}$
Status Affected:	$\overline{TO}$, $\overline{PD}$
Description:	CLRWDT instruction resets the Watchdog Timer. It also resets the prescaler of the WDT. Status bits $\overline{TO}$ and $\overline{PD}$ are set.

 © 2000 Microchip Technology Inc.

COMF	Complement f
Syntax:	[*label*] COMF f,d
Operands:	$0 \le f \le 127$ $d \in [0,1]$
Operation:	(f) → (destination)
Status Affected:	Z
Description:	The contents of register 'f' are complemented. If 'd' is 0, the result is stored in W. If 'd' is 1, the result is stored back in register 'f'.

GOTO	Unconditional Branch
Syntax:	[*label*] GOTO k
Operands:	$0 \le k \le 2047$
Operation:	k → PC<10:0> PCLATH<4:3> → PC<12:11>
Status Affected:	None
Description:	`GOTO` is an unconditional branch. The eleven bit immediate value is loaded into PC bits <10:0>. The upper bits of PC are loaded from PCLATH<4:3>. `GOTO` is a two cycle instruction.

DECF	Decrement f
Syntax:	[*label*] DECF f,d
Operands:	$0 \le f \le 127$ $d \in [0,1]$
Operation:	(f) - 1 → (destination)
Status Affected:	Z
Description:	Decrement register 'f'. If 'd' is 0, the result is stored in the W register. If 'd' is 1, the result is stored back in register 'f'.

INCF	Increment f
Syntax:	[*label*] INCF f,d
Operands:	$0 \le f \le 127$ $d \in [0,1]$
Operation:	(f) + 1 → (destination)
Status Affected:	Z
Description:	The contents of register 'f' are incremented. If 'd' is 0, the result is placed in the W register. If 'd' is 1, the result is placed back in register 'f'.

DECFSZ	Decrement f, Skip if 0
Syntax:	[*label*] DECFSZ f,d
Operands:	$0 \le f \le 127$ $d \in [0,1]$
Operation:	(f) - 1 → (destination); skip if result = 0
Status Affected:	None
Description:	The contents of register 'f' are decremented. If 'd' is 0, the result is placed in the W register. If 'd' is 1, the result is placed back in register 'f'. If the result is 1, the next instruction is executed. If the result is 0, then a `NOP` is executed instead making it a 2TCY instruction.

INCFSZ	Increment f, Skip if 0
Syntax:	[*label*] INCFSZ f,d
Operands:	$0 \le f \le 127$ $d \in [0,1]$
Operation:	(f) + 1 → (destination), skip if result = 0
Status Affected:	None
Description:	The contents of register 'f' are incremented. If 'd' is 0, the result is placed in the W register. If 'd' is 1, the result is placed back in register 'f'. If the result is 1, the next instruction is executed. If the result is 0, a `NOP` is executed instead making it a 2TCY instruction.

IORLW	Inclusive OR Literal with W
Syntax:	[*label*] IORLW k
Operands:	$0 \le k \le 255$
Operation:	(W) .OR. k → (W)
Status Affected:	Z
Description:	The contents of the W register are OR'ed with the eight bit literal 'k'. The result is placed in the W register.

MOVLW	Move Literal to W
Syntax:	[*label*] MOVLW k
Operands:	$0 \le k \le 255$
Operation:	k → (W)
Status Affected:	None
Description:	The eight bit literal 'k' is loaded into W register. The don't cares will assemble as 0's.

IORWF	Inclusive OR W with f
Syntax:	[*label*] IORWF f,d
Operands:	$0 \le f \le 127$ $d \in [0,1]$
Operation:	(W) .OR. (f) → (destination)
Status Affected:	Z
Description:	Inclusive OR the W register with register 'f'. If 'd' is 0 the result is placed in the W register. If 'd' is 1 the result is placed back in register 'f'.

MOVWF	Move W to f
Syntax:	[*label*] MOVWF f
Operands:	$0 \le f \le 127$
Operation:	(W) → (f)
Status Affected:	None
Description:	Move data from W register to register 'f'.

MOVF	Move f
Syntax:	[*label*] MOVF f,d
Operands:	$0 \le f \le 127$ $d \in [0,1]$
Operation:	(f) → (destination)
Status Affected:	Z
Description:	The contents of register f are moved to a destination dependant upon the status of d. If d = 0, destination is W register. If d = 1, the destination is file register f itself. d = 1 is useful to test a file register since status flag Z is affected.

NOP	No Operation
Syntax:	[*label*] NOP
Operands:	None
Operation:	No operation
Status Affected:	None
Description:	No operation.

 © 2000 Microchip Technology Inc.

RETFIE	Return from Interrupt
Syntax:	[*label*] RETFIE
Operands:	None
Operation:	TOS → PC, 1 → GIE
Status Affected:	None

RETLW	Return with Literal in W
Syntax:	[*label*] RETLW k
Operands:	$0 \le k \le 255$
Operation:	k → (W); TOS → PC
Status Affected:	None
Description:	The W register is loaded with the eight bit literal 'k'. The program counter is loaded from the top of the stack (the return address). This is a two cycle instruction.

RETURN	Return from Subroutine
Syntax:	[*label*] RETURN
Operands:	None
Operation:	TOS → PC
Status Affected:	None
Description:	Return from subroutine. The stack is POPed and the top of the stack (TOS) is loaded into the program counter. This is a two cycle instruction.

RLF	Rotate Left f through Carry
Syntax:	[*label*] RLF f,d
Operands:	$0 \le f \le 127$ $d \in [0,1]$
Operation:	See description below
Status Affected:	C
Description:	The contents of register 'f' are rotated one bit to the left through the Carry Flag. If 'd' is 0, the result is placed in the W register. If 'd' is 1, the result is stored back in register 'f'. 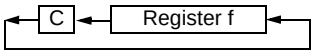

RRF	Rotate Right f through Carry
Syntax:	[*label*] RRF f,d
Operands:	$0 \le f \le 127$ $d \in [0,1]$
Operation:	See description below
Status Affected:	C
Description:	The contents of register 'f' are rotated one bit to the right through the Carry Flag. If 'd' is 0, the result is placed in the W register. If 'd' is 1, the result is placed back in register 'f'. 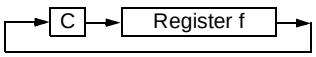

SLEEP	
Syntax:	[*label*] SLEEP
Operands:	None
Operation:	00h → WDT, 0 → WDT prescaler, 1 → $\overline{TO}$, 0 → $\overline{PD}$
Status Affected:	$\overline{TO}$, $\overline{PD}$
Description:	The power-down status bit, $\overline{PD}$ is cleared. Time-out status bit, $\overline{TO}$ is set. Watchdog Timer and its prescaler are cleared. The processor is put into SLEEP mode with the oscillator stopped.

SUBLW	Subtract W from Literal
Syntax:	[*label*] SUBLW k
Operands:	$0 \le k \le 255$
Operation:	k - (W) → (W)
Status Affected:	C, DC, Z
Description:	The W register is subtracted (2's complement method) from the eight bit literal 'k'. The result is placed in the W register.

SUBWF	Subtract W from f
Syntax:	[*label*] SUBWF f,d
Operands:	$0 \le f \le 127$ $d \in [0,1]$
Operation:	(f) - (W) → (destination)
Status Affected:	C, DC, Z
Description:	Subtract (2's complement method) W register from register 'f'. If 'd' is 0, the result is stored in the W register. If 'd' is 1, the result is stored back in register 'f'.

SWAPF	Swap Nibbles in f
Syntax:	[*label*] SWAPF f,d
Operands:	$0 \le f \le 127$ $d \in [0,1]$
Operation:	(f<3:0>) → (destination<7:4>), (f<7:4>) → (destination<3:0>)
Status Affected:	None
Description:	The upper and lower nibbles of register 'f' are exchanged. If 'd' is 0, the result is placed in W register. If 'd' is 1, the result is placed in register 'f'.

XORLW	Exclusive OR Literal with W
Syntax:	[*label*] XORLW k
Operands:	$0 \le k \le 255$
Operation:	(W) .XOR. k → (W)
Status Affected:	Z
Description:	The contents of the W register are XOR'ed with the eight bit literal 'k'. The result is placed in the W register.

XORWF	Exclusive OR W with f
Syntax:	[*label*] XORWF f,d
Operands:	$0 \le f \le 127$ $d \in [0,1]$
Operation:	(W) .XOR. (f) → (destination)
Status Affected:	Z
Description:	Exclusive OR the contents of the W register with register 'f'. If 'd' is 0, the result is stored in the W register. If 'd' is 1, the result is stored back in register 'f'.

 © 2000 Microchip Technology Inc.

14.0 DEVELOPMENT SUPPORT

The PICmicro® microcontrollers are supported with a full range of hardware and software development tools:

- Integrated Development Environment
  - MPLAB® IDE Software
- Assemblers/Compilers/Linkers
  - MPASM Assembler
  - MPLAB-C17 and MPLAB-C18 C Compilers
  - MPLINK/MPLIB Linker/Librarian
- Simulators
  - MPLAB-SIM Software Simulator
- Emulators
  - MPLAB-ICE Real-Time In-Circuit Emulator
  - ICEPIC™
- In-Circuit Debugger
  - MPLAB-ICD for PIC16F87X
- Device Programmers
  - PRO MATE® II Universal Programmer
  - PICSTART® Plus Entry-Level Prototype Programmer
- Low-Cost Demonstration Boards
  - PICDEM-1
  - PICDEM-2
  - PICDEM-3
  - PICDEM-17
  - KEELOQ®

14.1 MPLAB Integrated Development Environment Software

The MPLAB IDE software brings an ease of software development previously unseen in the 8-bit microcontroller market. MPLAB is a Windows®-based application which contains:

- Multiple functionality
  - editor
  - simulator
  - programmer (sold separately)
  - emulator (sold separately)
- A full featured editor
- A project manager
- Customizable tool bar and key mapping
- A status bar
- On-line help

MPLAB allows you to:

- Edit your source files (either assembly or ‘C’)
- One touch assemble (or compile) and download to PICmicro tools (automatically updates all project information)
- Debug using:
  - source files
  - absolute listing file
  - object code

The ability to use MPLAB with Microchip’s simulator, MPLAB-SIM, allows a consistent platform and the ability to easily switch from the cost-effective simulator to the full featured emulator with minimal retraining.

14.2 MPASM Assembler

MPASM is a full featured universal macro assembler for all PICmicro MCU’s. It can produce absolute code directly in the form of HEX files for device programmers, or it can generate relocatable objects for MPLINK.

MPASM has a command line interface and a Windows shell and can be used as a standalone application on a Windows 3.x or greater system. MPASM generates relocatable object files, Intel standard HEX files, MAP files to detail memory usage and symbol reference, an absolute LST file which contains source lines and generated machine code, and a COD file for MPLAB debugging.

MPASM features include:

- MPASM and MPLINK are integrated into MPLAB projects.
- MPASM allows user defined macros to be created for streamlined assembly.
- MPASM allows conditional assembly for multi purpose source files.
- MPASM directives allow complete control over the assembly process.

14.3 MPLAB-C17 and MPLAB-C18 C Compilers

The MPLAB-C17 and MPLAB-C18 Code Development Systems are complete ANSI ‘C’ compilers and integrated development environments for Microchip’s PIC17CXXX and PIC18CXXX family of microcontrollers, respectively. These compilers provide powerful integration capabilities and ease of use not found with other compilers.

For easier source level debugging, the compilers provide symbol information that is compatible with the MPLAB IDE memory display.

14.4 MPLINK/MPLIB Linker/Librarian

MPLINK is a relocatable linker for MPASM and MPLAB-C17 and MPLAB-C18. It can link relocatable objects from assembly or C source files along with pre-compiled libraries using directives from a linker script.

MPLIB is a librarian for pre-compiled code to be used with MPLINK. When a routine from a library is called from another source file, only the modules that contains that routine will be linked in with the application. This allows large libraries to be used efficiently in many different applications. MPLIB manages the creation and modification of library files.

MPLINK features include:

- MPLINK works with MPASM and MPLAB-C17 and MPLAB-C18.
- MPLINK allows all memory areas to be defined as sections to provide link-time flexibility.

MPLIB features include:

- MPLIB makes linking easier because single libraries can be included instead of many smaller files.
- MPLIB helps keep code maintainable by grouping related modules together.
- MPLIB commands allow libraries to be created and modules to be added, listed, replaced, deleted, or extracted.

14.5 MPLAB-SIM Software Simulator

The MPLAB-SIM Software Simulator allows code development in a PC host environment by simulating the PICmicro series microcontrollers on an instruction level. On any given instruction, the data areas can be examined or modified and stimuli can be applied from a file or user-defined key press to any of the pins. The execution can be performed in single step, execute until break, or trace mode.

MPLAB-SIM fully supports symbolic debugging using MPLAB-C17 and MPLAB-C18 and MPASM. The Software Simulator offers the flexibility to develop and debug code outside of the laboratory environment making it an excellent multi-project software development tool.

14.6 MPLAB-ICE High Performance Universal In-Circuit Emulator with MPLAB IDE

The MPLAB-ICE Universal In-Circuit Emulator is intended to provide the product development engineer with a complete microcontroller design tool set for PICmicro microcontrollers (MCUs). Software control of MPLAB-ICE is provided by the MPLAB Integrated Development Environment (IDE), which allows editing, “make” and download, and source debugging from a single environment.

Interchangeable processor modules allow the system to be easily reconfigured for emulation of different processors. The universal architecture of the MPLAB-ICE allows expansion to support new PICmicro microcontrollers.

The MPLAB-ICE Emulator System has been designed as a real-time emulation system with advanced features that are generally found on more expensive development tools. The PC platform and Microsoft® Windows 3.x/95/98 environment were chosen to best make these features available to you, the end user.

MPLAB-ICE 2000 is a full-featured emulator system with enhanced trace, trigger, and data monitoring features. Both systems use the same processor modules and will operate across the full operating speed range of the PICmicro MCU.

14.7 ICEPIC

ICEPIC is a low-cost in-circuit emulation solution for the Microchip Technology PIC16C5X, PIC16C6X, PIC16C7X, and PIC16CXXX families of 8-bit one-time-programmable (OTP) microcontrollers. The modular system can support different subsets of PIC16C5X or PIC16CXXX products through the use of interchangeable personality modules or daughter boards. The emulator is capable of emulating without target application circuitry being present.

14.8 MPLAB-ICD In-Circuit Debugger

Microchip’s In-Circuit Debugger, MPLAB-ICD, is a powerful, low-cost run-time development tool. This tool is based on the flash PIC16F877 and can be used to develop for this and other PICmicro microcontrollers from the PIC16CXXX family. MPLAB-ICD utilizes the In-Circuit Debugging capability built into the PIC16F87X. This feature, along with Microchip’s In-Circuit Serial Programming protocol, offers cost-effective in-circuit flash programming and debugging from the graphical user interface of the MPLAB Integrated Development Environment. This enables a designer to develop and debug source code by watching variables, single-stepping and setting break points. Running at full speed enables testing hardware in real-time. The MPLAB-ICD is also a programmer for the flash PIC16F87X family.

 © 2000 Microchip Technology Inc.

14.9 PRO MATE II Universal Programmer

The PRO MATE II Universal Programmer is a full-featured programmer capable of operating in stand-alone mode as well as PC-hosted mode. PRO MATE II is CE compliant.

The PRO MATE II has programmable V_{DD} and V_{PP} supplies which allows it to verify programmed memory at V_{DD} min and V_{DD} max for maximum reliability. It has an LCD display for instructions and error messages, keys to enter commands and a modular detachable socket assembly to support various package types. In stand-alone mode the PRO MATE II can read, verify or program PICmicro devices. It can also set code-protect bits in this mode.

14.10 PICSTART Plus Entry Level Development System

The PICSTART programmer is an easy-to-use, low-cost prototype programmer. It connects to the PC via one of the COM (RS-232) ports. MPLAB Integrated Development Environment software makes using the programmer simple and efficient.

PICSTART Plus supports all PICmicro devices with up to 40 pins. Larger pin count devices such as the PIC16C92X, and PIC17C76X may be supported with an adapter socket. PICSTART Plus is CE compliant.

14.11 PICDEM-1 Low-Cost PICmicro Demonstration Board

The PICDEM-1 is a simple board which demonstrates the capabilities of several of Microchip's microcontrollers. The microcontrollers supported are: PIC16C5X (PIC16C54 to PIC16C58A), PIC16C61, PIC16C62X, PIC16C71, PIC16C8X, PIC17C42, PIC17C43 and PIC17C44. All necessary hardware and software is included to run basic demo programs. The users can program the sample microcontrollers provided with the PICDEM-1 board, on a PRO MATE II or PICSTART-Plus programmer, and easily test firmware. The user can also connect the PICDEM-1 board to the MPLAB-ICE emulator and download the firmware to the emulator for testing. Additional prototype area is available for the user to build some additional hardware and connect it to the microcontroller socket(s). Some of the features include an RS-232 interface, a potentiometer for simulated analog input, push-button switches and eight LEDs connected to PORTB.

14.12 PICDEM-2 Low-Cost PIC16CXX Demonstration Board

The PICDEM-2 is a simple demonstration board that supports the PIC16C62, PIC16C64, PIC16C65, PIC16C73 and PIC16C74 microcontrollers. All the necessary hardware and software is included to run the basic demonstration programs. The user can program the sample microcontrollers provided with the PICDEM-2 board, on a PRO MATE II programmer or PICSTART-Plus, and easily test firmware. The MPLAB-ICE emulator may also be used with the PICDEM-2 board to test firmware. Additional prototype area has been provided to the user for adding additional hardware and connecting it to the microcontroller socket(s). Some of the features include a RS-232 interface, push-button switches, a potentiometer for simulated analog input, a Serial EEPROM to demonstrate usage of the I^2C bus and separate headers for connection to an LCD module and a keypad.

14.13 PICDEM-3 Low-Cost PIC16CXXX Demonstration Board

The PICDEM-3 is a simple demonstration board that supports the PIC16C923 and PIC16C924 in the PLCC package. It will also support future 44-pin PLCC microcontrollers with a LCD Module. All the necessary hardware and software is included to run the basic demonstration programs. The user can program the sample microcontrollers provided with the PICDEM-3 board, on a PRO MATE II programmer or PICSTART Plus with an adapter socket, and easily test firmware. The MPLAB-ICE emulator may also be used with the PICDEM-3 board to test firmware. Additional prototype area has been provided to the user for adding hardware and connecting it to the microcontroller socket(s). Some of the features include an RS-232 interface, push-button switches, a potentiometer for simulated analog input, a thermistor and separate headers for connection to an external LCD module and a keypad. Also provided on the PICDEM-3 board is an LCD panel, with 4 commons and 12 segments, that is capable of displaying time, temperature and day of the week. The PICDEM-3 provides an additional RS-232 interface and Windows 3.1 software for showing the demultiplexed LCD signals on a PC. A simple serial interface allows the user to construct a hardware demultiplexer for the LCD signals.

14.14 PICDEM-17

The PICDEM-17 is an evaluation board that demonstrates the capabilities of several Microchip microcontrollers, including PIC17C752, PIC17C756, PIC17C762, and PIC17C766. All necessary hardware is included to run basic demo programs, which are supplied on a 3.5-inch disk. A programmed sample is included, and the user may erase it and program it with the other sample programs using the PRO MATE II or PICSTART Plus device programmers and easily debug and test the sample code. In addition, PICDEM-17 supports down-loading of programs to and executing out of external FLASH memory on board. The PICDEM-17 is also usable with the MPLAB-ICE or PICMASTER emulator, and all of the sample programs can be run and modified using either emulator. Additionally, a generous prototype area is available for user hardware.

14.15 KEELOQ Evaluation and Programming Tools

KEELOQ evaluation and programming tools support Microchips HCS Secure Data Products. The HCS evaluation kit includes an LCD display to show changing codes, a decoder to decode transmissions, and a programming interface to program test transmitters.

 © 2000 Microchip Technology Inc.

TABLE 14-1: DEVELOPMENT TOOLS FROM MICROCHIP

		PIC12CXXX	PIC14000	PIC16C5X	PIC16C6X	PIC16CXXX	PIC16F62X	PIC16C7X	PIC16C7XX	PIC16C8X	PIC16F8XX	PIC16C9XX	PIC17C4X	PIC17C7XX	PIC18CXX2	24CXX/ 25CXX/ 93CXX	HCSXXX	MCRFXXX	MCP2510
Software Tools	MPLAB® Integrated Development Environment	✓	✓	✓	✓	✓	✓	✓	✓	✓	✓	✓	✓	✓	✓				
	MPLAB® C17 Compiler												✓	✓					
	MPLAB® C18 Compiler														✓				
	MPASM/MPLINK	✓	✓	✓	✓	✓	✓	✓	✓	✓	✓	✓	✓	✓	✓	✓	✓		
Emulators	MPLAB®-ICE	✓	✓	✓	✓	✓	✓**	✓	✓	✓	✓	✓	✓	✓	✓				
	ICEPIC‰ Low-Cost In-Circuit Emulator	✓		✓	✓	✓		✓	✓	✓		✓							
Debugger	MPLAB®-ICD In-Circuit Debugger				✓*			✓*			✓								
Programmers	PICSTART® Plus Low-Cost Universal Dev. Kit	✓	✓	✓	✓	✓	✓**	✓	✓	✓	✓	✓	✓	✓	✓				
	PRO MATE® II Universal Programmer	✓	✓	✓	✓	✓	✓**	✓	✓	✓	✓	✓	✓	✓	✓	✓	✓		
Demo Boards and Eval Kits	PICDEM-1			✓		✓		✓†		✓			✓						
	PICDEM-2				✓†			✓†							✓				
	PICDEM-3											✓							
	PICDEM-14A		✓																
	PICDEM-17													✓					
	KEELOQ® Evaluation Kit																✓		
	KEELOQ Transponder Kit																✓		
	microID™ Programmer's Kit																	✓	
	125 kHz microID Developer's Kit																	✓	
	125 kHz Anticollision microID Developer's Kit																	✓	
	13.56 MHz Anticollision microID Developer's Kit																	✓	
	MCP2510 CAN Developer's Kit																		✓

* Contact the Microchip Technology Inc. web site at www.microchip.com for information on how to use the MPLAB®-ICD In-Circuit Debugger (DV164001) with PIC16C62, 63, 64, 65, 72, 73, 74, 76, 77
** Contact Microchip Technology Inc. for availability date.
† Development tool is available on select devices.

NOTES:

 © 2000 Microchip Technology Inc.

15.0 ELECTRICAL CHARACTERISTICS

Absolute Maximum Ratings †

Ambient temperature under bias ..... -55 to +125°C

Storage temperature ..... -65°C to +150°C

Voltage on any pin with respect to V_{SS} (except V_{DD}, $\overline{MCLR}$. and RA4) ..... -0.3V to (V_{DD} + 0.3V)

Voltage on V_{DD} with respect to V_{SS} ..... -0.3 to +6.5V

Voltage on $\overline{MCLR}$ with respect to V_{SS} (Note 2) ..... 0 to +13.5V

Voltage on RA4 with respect to Vss ..... 0 to +12V

Total power dissipation (Note 1) 1.0W

Maximum current out of V_{SS} pin ..... 300 mA

Maximum current into V_{DD} pin ..... 250 mA

Input clamp current, I_{IK} (V_I < 0 or V_I > V_{DD}) ..... ± 20 mA

Output clamp current, I_{OK} (V_O < 0 or V_O > V_{DD}) ..... ± 20 mA

Maximum output current sunk by any I/O pin ..... 25 mA

Maximum output current sourced by any I/O pin ..... 25 mA

Maximum current sunk by PORTA, PORTB, and PORTE (combined) (Note 3) ..... 200 mA

Maximum current sourced by PORTA, PORTB, and PORTE (combined) (Note 3) ..... 200 mA

Maximum current sunk by PORTC and PORTD (combined) (Note 3) ..... 200 mA

Maximum current sourced by PORTC and PORTD (combined) (Note 3) ..... 200 mA

Note 1: Power dissipation is calculated as follows: Pdis = V_{DD} x {I_{DD} - ∑ I_{OH}} + ∑ {(V_{DD} - V_{OH}) x I_{OH}} + ∑(Vol x I_{OL})

2: Voltage spikes below V_{SS} at the $\overline{MCLR}$ pin, inducing currents greater than 80 mA, may cause latch-up. Thus, a series resistor of 50-100Ω should be used when applying a “low” level to the $\overline{MCLR}$ pin, rather than pulling this pin directly to V_{SS}.

3: PORTD and PORTE are not implemented on the PIC16F73/76 devices.

† NOTICE: Stresses above those listed under “Absolute Maximum Ratings” may cause permanent damage to the device. This is a stress rating only and functional operation of the device at those or any other conditions above those indicated in the operation listings of this specification is not implied. Exposure to maximum rating conditions for extended periods may affect device reliability.

PRELIMINARY

FIGURE 15-1: PIC16F7X VOLTAGE-FREQUENCY GRAPH

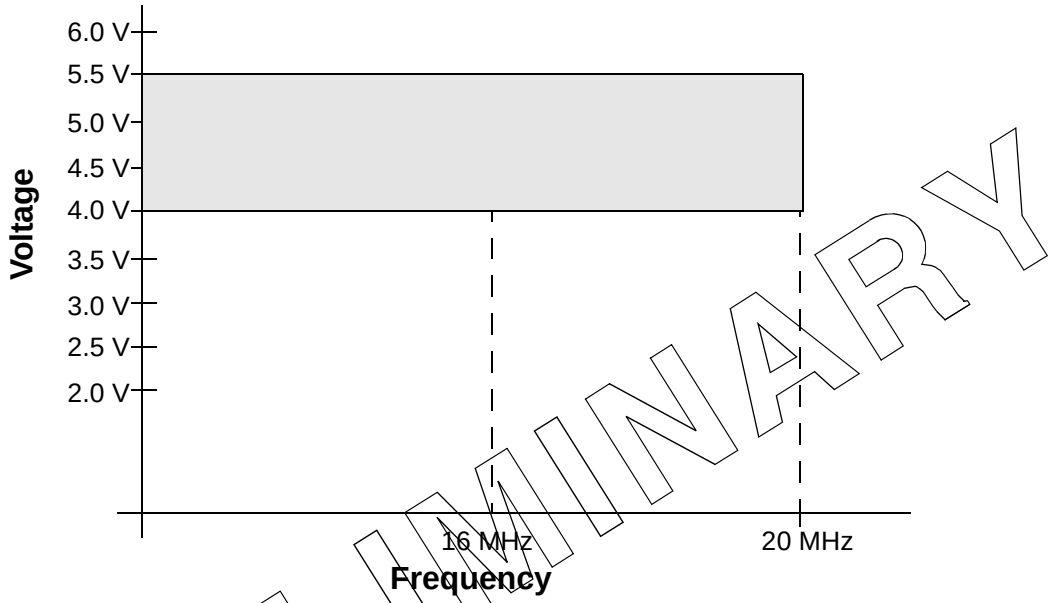

FIGURE 15-2: PIC16LF7X VOLTAGE-FREQUENCY GRAPH

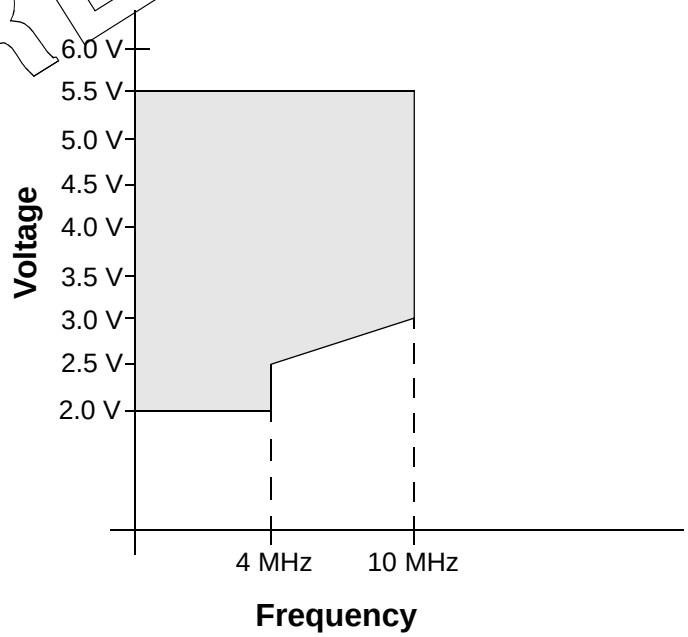

F_{MAX} = (12 MHz/V) ($V_{DDAPPMIN}$ - 2.5 V) + 4 MHz

Note 1: $V_{DDAPPMIN}$ is the minimum voltage of the PICmicro® device in the application.

2: F_{MAX} has a maximum frequency of 10MHz.

PRELIMINARY

 © 2000 Microchip Technology Inc.

15.1 DC Characteristics

PIC16LF73/74/76/77 (Industrial)			Standard Operating Conditions (unless otherwise stated) Operating temperature -40°C ≤ TA ≤ +85°C for industrial				
PIC16F73/74/76/77 (Industrial)			**Standard Operating Conditions (unless otherwise stated)** Operating temperature -40°C ≤ TA ≤ +85°C for industrial				
Param No.	**Sym**	**Characteristic**	**Min**	**Typ†**	**Max**	**Units**	**Conditions**
D001	VDD	**Supply Voltage**					
		PIC16LF7X	2.0	-	5.5	V	All osc configurations (DC - 10 MHz)
D001 D001A		PIC16F7X	4.0 VBOR*	- -	5.5 5.5	V V	All configurations BOR enabled **(Note 7)**
D002*	VDR	**RAM Data Retention Voltage (Note 1)**	-	1.5	-	V	
D003	VPOR	**VDD Start Voltage** to ensure internal Power-on Reset signal	-	VSS	-	V	See section on Power-on Reset for details
D004*	SVDD	**VDD Rise Rate** to ensure internal Power-on Reset signal	0.05	-	-	V/ms	See section on Power-on Reset for details
D005	VBOR	**Brown-out Reset Voltage**	3.65	4.0	4.35	V	BODEN bit in configuration word enabled
D010	IDD	**Supply Current (Note 2, 5)**					
		PIC16LF7X	-	0.6	2.0	mA	XT, RC osc configuration FOSC = 4 MHz, VDD = 3.0V **(Note 4)**
D010A			-	20	35	µA	LP osc configuration FOSC = 32 kHz, VDD = 3.0V, WDT disabled
D010		PIC16F7X	-	1.6	4	mA	XT, RC osc configuration FOSC = 4 MHz, VDD = 5.5V **(Note 4)**
D013			-	7	15	mA	HS osc configuration FOSC = 20 MHz, VDD = 5.5V
D015*	DIBOR	**Brown-out Reset Current (Note 6)**	-	85	200	µA	BOR enabled VDD = 5.0V

Legend: * These parameters are characterized but not tested.
† Data in "Typ" column is at 5V, 25°C unless otherwise stated. These parameters are for design guidance only and are not tested.

Note 1: This is the limit to which VDD can be lowered without losing RAM data.

2: The supply current is mainly a function of the operating voltage and frequency. Other factors such as I/O pin loading and switching rate, oscillator type, internal code execution pattern and temperature also have an impact on the current consumption.
The test conditions for all IDD measurements in active operation mode are:
OSC1 = external square wave, from rail to rail; all I/O pins tristated, pulled to VDD
MCLR = VDD; WDT enabled/disabled as specified.

3: The power-down current in SLEEP mode does not depend on the oscillator type. Power-down current is measured with the part in SLEEP mode, with all I/O pins in hi-impedance state and tied to VDD and VSS.

4: For RC osc configuration, current through REXT is not included. The current through the resistor can be estimated by the formula Ir = VDD/2REXT (mA) with REXT in kOhm.

5: Timer1 oscillator (when enabled) adds approximately 20 µA to the specification. This value is from characterization and is for design guidance only. This is not tested.

6: The Δ current is the additional current consumed when this peripheral is enabled. This current should be added to the base IDD or IPD measurement.

7: When BOR is enabled, the device will operate correctly until the VBOR voltage trip point is reached.

PRELIMINARY

PIC16LF73/74/76/77 (Industrial)			Standard Operating Conditions (unless otherwise stated) Operating temperature -40°C ≤ TA ≤ +85°C for industrial				
PIC16F73/74/76/77 (Industrial)			**Standard Operating Conditions (unless otherwise stated)** Operating temperature -40°C ≤ TA ≤ +85°C for industrial				
Param No.	**Sym**	**Characteristic**	**Min**	**Typ†**	**Max**	**Units**	**Conditions**
D020	IPD	**Power-down Current (Note 3, 5)**					
		PIC16LF7X	-	7.5	30	μA	VDD = 3.0V, WDT enabled, -40°C to +85°C
D021			-	0.9	5	μA	VDD = 3.0V, WDT disabled, -40°C to +85°C
D020		PIC16F7X	-	10.5	42	μA	VDD = 4.0V, WDT enabled, -40°C to +85°C
D021			-	1.5	19	μA	VDD = 4.0V, WDT disabled, -40°C to +85°C
D023*	DIBOR	**Brown-out Reset Current (Note 6)**	-	85	200	μA	BOR enabled VDD = 5.0V

Legend: * These parameters are characterized but not tested.
† Data in "Typ" column is at 5V, 25°C unless otherwise stated. These parameters are for design guidance only and are not tested.

Note 1: This is the limit to which VDD can be lowered without losing RAM data.

2: The supply current is mainly a function of the operating voltage and frequency. Other factors such as I/O pin loading and switching rate, oscillator type, internal code execution pattern and temperature also have an impact on the current consumption.
The test conditions for all IDD measurements in active operation mode are:
OSC1 = external square wave, from rail to rail; all I/O pins tristated, pulled to VDD
MCLR = VDD; WDT enabled/disabled as specified.

3: The power-down current in SLEEP mode does not depend on the oscillator type. Power-down current is measured with the part in SLEEP mode, with all I/O pins in hi-impedance state and tied to VDD and VSS.

4: For RC osc configuration, current through REXT is not included. The current through the resistor can be estimated by the formula Ir = VDD/2REXT (mA) with REXT in kOhm.

5: Timer1 oscillator (when enabled) adds approximately 20 μA to the specification. This value is from characterization and is for design guidance only. This is not tested.

6: The Δ current is the additional current consumed when this peripheral is enabled. This current should be added to the base IDD or IPD measurement.

7: When BOR is enabled, the device will operate correctly until the VBOR voltage trip point is reached.

PRELIMINARY

 © 2000 Microchip Technology Inc.

15.2 DC Characteristics: PIC16F73/74/76/77 (Industrial) PIC16LF73/74/76/77 (Industrial)

DC CHARACTERISTICS			Standard Operating Conditions (unless otherwise stated) Operating temperature -40°C ≤ TA ≤ +85°C for industrial and Operating voltage VDD range as described in DC spec Section 15.1 and Section 15.2.				
Param No.	**Sym**	**Characteristic**	**Min**	**Typ†**	**Max**	**Units**	**Conditions**
	VIL	**Input Low Voltage**					
		I/O ports					
D030		with TTL buffer	VSS	-	0.15VDD	V	For entire VDD range
D030A			VSS	-	0.8V	V	4.5V ≤ VDD ≤ 5.5V
D031		with Schmitt Trigger buffer	VSS	-	0.2VDD	V	
D032		$\overline{\text{MCLR}}$, OSC1 (in RC mode)	VSS	-	0.2VDD	V	
D033		OSC1 (in XT and LP mode)	VSS	-	0.3V	V	**(Note 1)**
		OSC1 (in HS mode)	VSS	-	0.3VDD	V	**(Note 1)**
		Ports RC3 and RC4					
D034		with Schmitt Trigger buffer	VSS	-	0.3VDD	V	For entire VDD range
	VIH	**Input High Voltage**					
		I/O ports		-			
D040		with TTL buffer	2.0	-	VDD	V	4.5V ≤ VDD ≤ 5.5V
D040A			0.25VDD + 0.8V	-	VDD	V	For entire VDD range
D041		with Schmitt Trigger buffer	0.8VDD	-	VDD	V	For entire VDD range
D042		$\overline{\text{MCLR}}$	0.8VDD	-	VDD	V	
D042A		OSC1 (in XT and LP mode)	1.6V	-	VDD	V	**(Note 1)**
		OSC1 (in HS mode)	0.7VDD	-	VDD	V	**(Note 1)**
D043		OSC1 (in RC mode)	0.9VDD	-	VDD	V	
		Ports RC3 and RC4					
D044		with Schmitt Trigger buffer	0.7VDD	-	VDD	V	For entire VDD range
D070	IPURB	**PORTB Weak Pull-up Current**	50	250	400	μA	VDD = 5V, VPIN = VSS
	IIL	**Input Leakage Current (Notes 2, 3)**					
D060		I/O ports	-	-	±1	μA	Vss ≤ VPIN ≤ VDD, Pin at hi-impedance
D061		$\overline{\text{MCLR}}$, RA4/T0CKI	-	-	±5	μA	Vss ≤ VPIN ≤ VDD
D063		OSC1	-	-	±5	μA	Vss ≤ VPIN ≤ VDD, XT, HS and LP osc configuration
	VOL	**Output Low Voltage**					
D080		I/O ports	-	-	0.6	V	IOL = 8.5 mA, VDD = 4.5V, -40°C to +85°C
D083		OSC2/CLKOUT (RC osc config)	-	-	0.6	V	IOL = 1.6 mA, VDD = 4.5V, -40°C to +85°C
	VOH	**Output High Voltage**					
D090		I/O ports **(Note 3)**	VDD - 0.7	-	-	V	IOH = -3.0 mA, VDD = 4.5V, -40°C to +85°C
D092		OSC2/CLKOUT (RC osc config)	VDD - 0.7	-	-	V	IOH = -1.3 mA, VDD = 4.5V, -40°C to +85°C
D150*	VOD	**Open-Drain High Voltage**	-	-	12	V	RA4 pin

Legend: * These parameters are characterized but not tested.
† Data in "Typ" column is at 5V, 25°C unless otherwise stated. These parameters are for design guidance only and are not tested.

Note 1: In RC oscillator configuration, the OSC1/CLKIN pin is a Schmitt Trigger input. It is not recommended that the PIC16F7X be driven with external clock in RC mode.

2: The leakage current on the $\overline{\text{MCLR}}$ pin is strongly dependent on the applied voltage level. The specified levels represent normal operating conditions. Higher leakage current may be measured at different input voltages.

3: Negative current is defined as current sourced by the pin.

PRELIMINARY

DC CHARACTERISTICS			Standard Operating Conditions (unless otherwise stated) Operating temperature -40°C ≤ TA ≤ +85°C for industrial and Operating voltage VDD range as described in DC spec Section 15.1 and Section 15.2.				
Param No.	**Sym**	**Characteristic**	**Min**	**Typ†**	**Max**	**Units**	**Conditions**
		Capacitive Loading Specs on Output Pins					
D100	COSC2	OSC2 pin	-	-	15	pF	In XT, HS and LP modes when external clock is used to drive OSC1
D101	CIO	All I/O pins and OSC2 (in RC mode)	-	-	50	pF	
D102	CB	SCL, SDA in I^2C mode	-	-	400	pF	
		Program FLASH Memory					
D130	EP	Endurance	-	-	100	E/W	25°C at 5V
D131	VPR	VDD for read	2.0	-	5.5	V	

Legend: * These parameters are characterized but not tested.
† Data in "Typ" column is at 5V, 25°C unless otherwise stated. These parameters are for design guidance only and are not tested.

Note 1: In RC oscillator configuration, the OSC1/CLKIN pin is a Schmitt Trigger input. It is not recommended that the PIC16F7X be driven with external clock in RC mode.

2: The leakage current on the $\overline{MCLR}$ pin is strongly dependent on the applied voltage level. The specified levels represent normal operating conditions. Higher leakage current may be measured at different input voltages.

3: Negative current is defined as current sourced by the pin.

PRELIMINARY

 © 2000 Microchip Technology Inc.

15.3 Timing Parameter Symbology

The timing parameter symbols have been created following one of the following formats:

1. TppS2ppS
2. TppS
3. TCC:ST (I²C specifications only)
4. Ts (I²C specifications only)

T			
F	Frequency	T	Time

Lowercase letters (pp) and their meanings:

pp			
cc	CCP1	osc	OSC1
ck	CLKOUT	rd	$\overline{RD}$
cs	$\overline{CS}$	rw	$\overline{RD}$ or $\overline{WR}$
di	SDI	sc	SCK
do	SDO	ss	$\overline{SS}$
dt	Data in	t0	T0CKI
io	I/O port	t1	T1CKI
mc	$\overline{MCLR}$	wr	$\overline{WR}$

Uppercase letters and their meanings:

S			
F	Fall	P	Period
H	High	R	Rise
I	Invalid (Hi-impedance)	V	Valid
L	Low	Z	Hi-impedance
I²C only			
AA	output access	High	High
BUF	Bus free	Low	Low

TCC:ST (I²C specifications only)

CC			
HD	Hold	SU	Setup
ST			
DAT	DATA input hold	STO	STOP condition
STA	START condition		

FIGURE 15-3: LOAD CONDITIONS

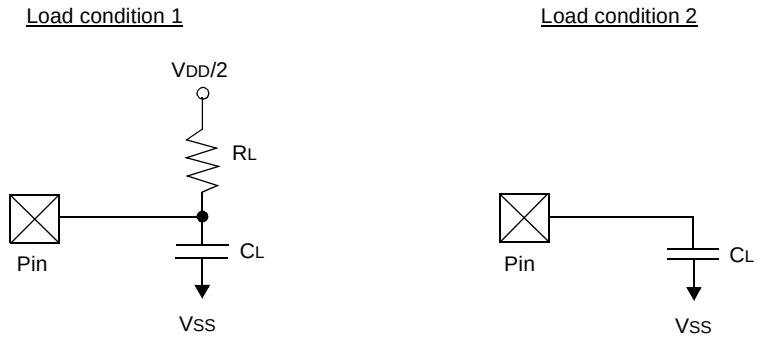

RL = 464Ω

CL = 50 pF for all pins except OSC2, but including PORTD and PORTE outputs as ports

15 pF for OSC2 output

Note: PORTD and PORTE are not implemented on the PIC16F73/76 devices.

PRELIMINARY

FIGURE 15-4: EXTERNAL CLOCK TIMING

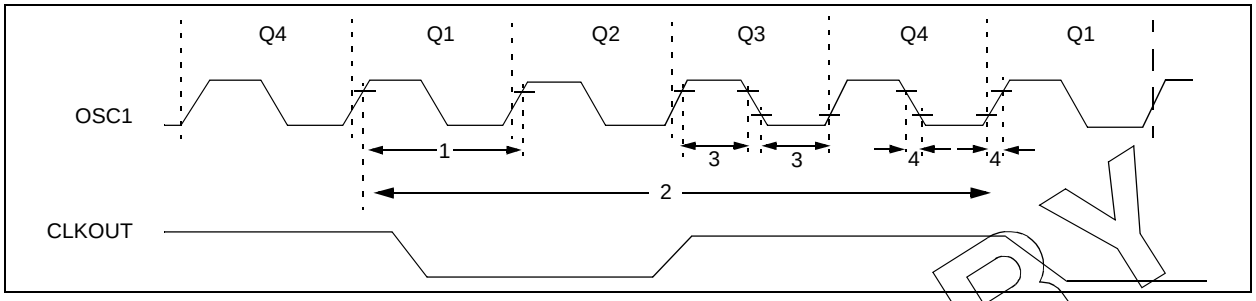

TABLE 15-1: EXTERNAL CLOCK TIMING REQUIREMENTS

Parameter No.	Sym	Characteristic	Min	Typ†	Max	Units	Conditions
	FOSC	**External CLKIN Frequency (Note 1)**	DC	—	1	MHz	XT osc mode
			DC	—	20	MHz	HS osc mode
			DC	—	32	kHz	LP osc mode
		Oscillator Frequency (Note 1)	DC	—	4	MHz	RC osc mode
			0.1	—	4	MHz	XT osc mode
			4	—	20	MHz	HS osc mode
			5	—	200	kHz	LP osc mode
1	TOSC	**External CLKIN Period (Note 1)**	1000	—	—	ns	XT osc mode
			50	—	—	ns	HS osc mode
			5	—	—	ms	LP osc mode
		Oscillator Period (Note 1)	250	—	—	ns	RC osc mode
			250	—	10,000	ns	XT osc mode
			50	—	250	ns	HS osc mode
			5	—	—	ms	LP osc mode
2	TCY	**Instruction Cycle Time (Note 1)**	200	TCY	DC	ns	TCY = 4/FOSC
3	TOSL, TOSH	**External Clock in (OSC1) High or Low Time**	500	—	—	ns	XT oscillator
			2.5	—	—	ms	LP oscillator
			15	—	—	ns	HS oscillator
4	TOSR, TOSF	**External Clock in (OSC1) Rise or Fall Time**	—	—	25	ns	XT oscillator
			—	—	50	ns	LP oscillator
			—	—	15	ns	HS oscillator

Legend: † Data in "Typ" column is at 5V, 25°C unless otherwise stated. These parameters are for design guidance only and are not tested.

Note 1: Instruction cycle period (TCY) equals four times the input oscillator time base period. All specified values are based on characterization data for that particular oscillator type under standard operating conditions with the device executing code. Exceeding these specified limits may result in an unstable oscillator operation and/or higher than expected current consumption. All devices are tested to operate at "min." values with an external clock applied to the OSC1/CLKIN pin. When an external clock input is used, the "max." cycle time limit is "DC" (no clock) for all devices.

PRELIMINARY

 © 2000 Microchip Technology Inc.

FIGURE 15-5: CLKOUT AND I/O TIMING

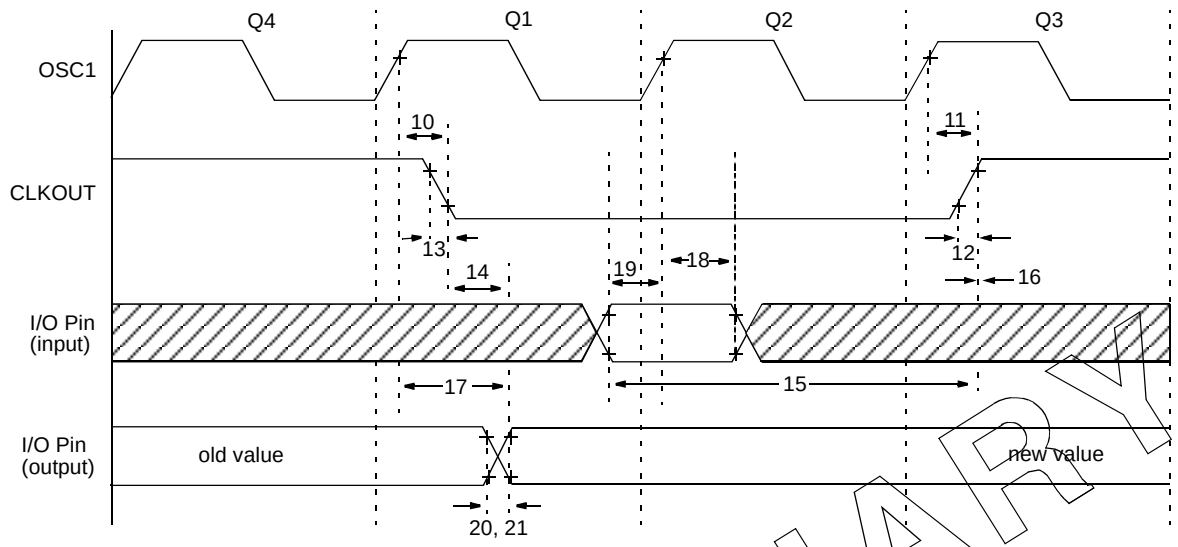

Note: Refer to Figure 15-3 for load conditions.

PRELIMINARY

TABLE 15-2: CLKOUT AND I/O TIMING REQUIREMENTS

Param No.	Sym	Characteristic		Min	Typ†	Max	Units	Conditions
10*	TosH2ckL	OSC1↑ to CLKOUT↓		—	75	200	ns	**(Note 1)**
11*	TosH2ckH	OSC1↑ to CLKOUT↑		—	75	200	ns	**(Note 1)**
12*	TckR	CLKOUT rise time		—	35	100	ns	**(Note 1)**
13*	TckF	CLKOUT fall time		—	35	100	ns	**(Note 1)**
14*	TckL2ioV	CLKOUT ↓ to Port out valid		—	—	0.5TCY + 20	ns	**(Note 1)**
15*	TioV2ckH	Port in valid before CLKOUT ↑		TOSC + 200	—	—	ns	**(Note 1)**
16*	TckH2ioI	Port in hold after CLKOUT ↑		0	—	—	ns	**(Note 1)**
17*	TosH2ioV	OSC1↑ (Q1 cycle) to Port out valid		—	100	255	ns	
18*	TosH2ioI	OSC1↑ (Q2 cycle) to Port input invalid (I/O in hold time)	Standard (**F**)	100	—	—	ns	
			Extended (**LF**)	200	—	—	ns	
19*	TioV2osH	Port input valid to OSC1↑ (I/O in setup time)		0	—	—	ns	
20*	TioR	Port output rise time	Standard (**F**)	—	10	40	ns	
			Extended (**LF**)	—	—	145	ns	
21*	TioF	Port output fall time	Standard (**F**)	—	10	40	ns	
			Extended (**LF**)	—	—	145	ns	
22††*	Tinp	INT pin high or low time		Tcy	—	—	ns	
23††*	Trbp	RB7:RB4 change INT high or low time		Tcy	—	—	ns	

Legend: * These parameters are characterized but not tested.
† Data in "Typ" column is at 5V, 25°C unless otherwise stated. These parameters are for design guidance only and are not tested.
†† These parameters are asynchronous events, not related to any internal clock edges.

Note 1: Measurements are taken in RC Mode where CLKOUT output is 4 x TOSC.

FIGURE 15-6: RESET, WATCHDOG TIMER, OSCILLATOR START-UP TIMER AND POWER-UP TIMER TIMING

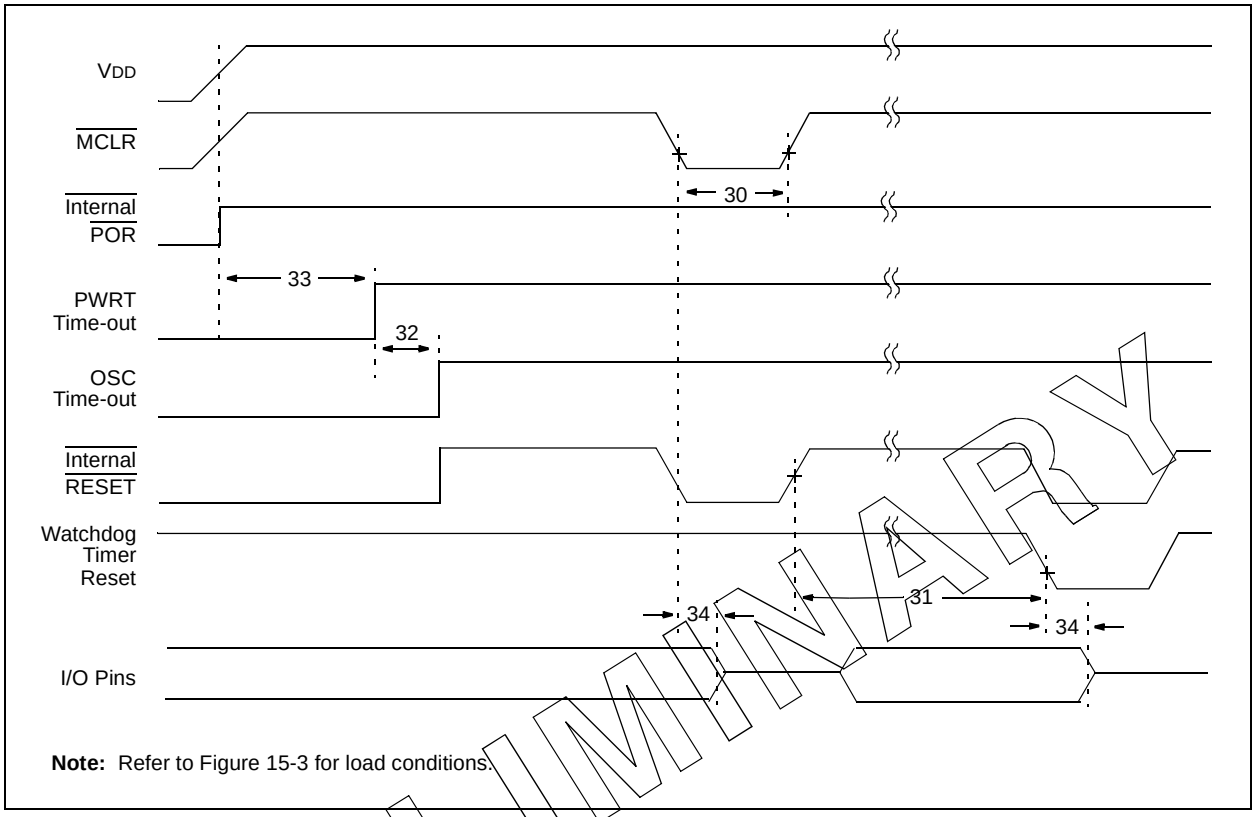

FIGURE 15-7: BROWN-OUT RESET TIMING

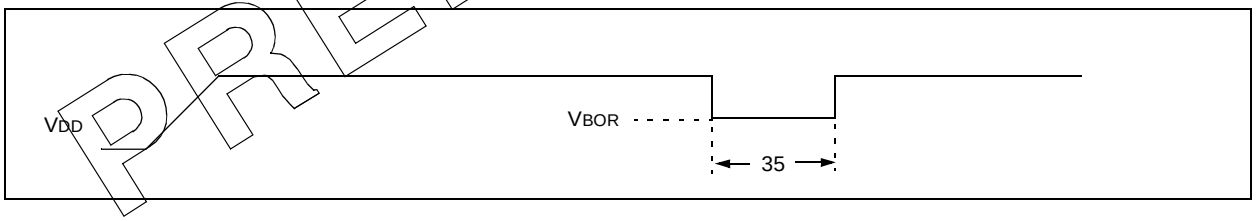

PRELIMINARY

TABLE 15-3: RESET, WATCHDOG TIMER, OSCILLATOR START-UP TIMER, POWER-UP TIMER, AND BROWN-OUT RESET REQUIREMENTS

Parameter No.	Sym	Characteristic	Min	Typ†	Max	Units	Conditions
30	TmcL	$\overline{\text{MCLR}}$ Pulse Width (low)	2	—	—	µs	VDD = 5V, -40°C to +85°C
31*	Twdt	Watchdog Timer Time-out Period (No Prescaler)	7	18	33	ms	VDD = 5V, -40°C to +85°C
32	Tost	Oscillation Start-up Timer Period	—	1024 TOSC	—	—	TOSC = OSC1 period
33*	Tpwrt	Power-up Timer Period	28	72	132	ms	VDD = 5V, -40°C to +85°C
34	TIOZ	I/O Hi-impedance from $\overline{\text{MCLR}}$ Low or Watchdog Timer Reset	—	—	2.1	µs	
35	TBOR	Brown-out Reset Pulse Width	100	—	—	µs	VDD ≤ VBOR (D005)

Legend: * These parameters are characterized but not tested.
† Data in "Typ" column is at 5V, 25°C unless otherwise stated. These parameters are for design guidance only and are not tested.

 © 2000 Microchip Technology Inc.

FIGURE 15-8: TIMER0 AND TIMER1 EXTERNAL CLOCK TIMINGS

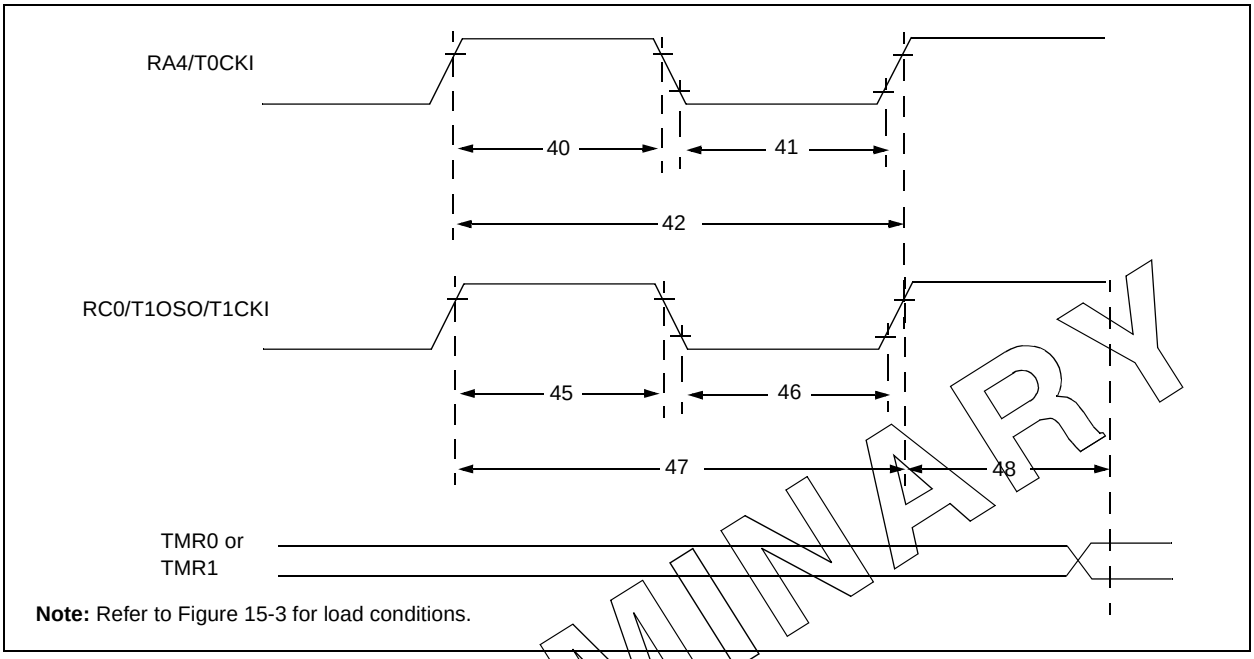

PRELIMINARY

TABLE 15-4: TIMER0 AND TIMER1 EXTERNAL CLOCK REQUIREMENTS

Param No.	Sym	Characteristic			Min	Typ†	Max	Units	Conditions
40*	Tt0H	T0CKI High Pulse Width		No Prescaler	0.5TCY + 20	—	—	ns	Must also meet parameter 42
				With Prescaler	10	—	—	ns	
41*	Tt0L	T0CKI Low Pulse Width		No Prescaler	0.5TCY + 20	—	—	ns	Must also meet parameter 42
				With Prescaler	10	—	—	ns	
42*	Tt0P	T0CKI Period		No Prescaler	TCY + 40	—	—	ns	
				With Prescaler	Greater of: 20 or TCY + 40 / N	—	—	ns	N = prescale value (2, 4, ..., 256)
45*	Tt1H	T1CKI High Time	Synchronous, Prescaler = 1		0.5TCY + 20	—	—	ns	Must also meet parameter 47
			Synchronous, Prescaler = 2,4,8	Standard(**F**)	15	—	—	ns	
				Extended(**LF**)	25	—	—	ns	
			Asynchronous	Standard(**F**)	30	—	—	ns	
				Extended(**LF**)	50	—	—	ns	
46*	Tt1L	T1CKI Low Time	Synchronous, Prescaler = 1		0.5TCY + 20	—	—	ns	Must also meet parameter 47
			Synchronous, Prescaler = 2,4,8	Standard(**F**)	15	—	—	ns	
				Extended(**LF**)	25	—	—	ns	
			Asynchronous	Standard(**F**)	30	—	—	ns	
				Extended(**LF**)	50	—	—	ns	
47*	Tt1P	T1CKI input period	Synchronous	Standard(**F**)	Greater of: 30 OR TCY + 40 / N	—	—	ns	N = prescale value (1, 2, 4, 8)
				Extended(**LF**)	Greater of: 50 OR TCY + 40 / N				N = prescale value (1, 2, 4, 8)
			Asynchronous	Standard(**F**)	60	—	—	ns	
				Extended(**LF**)	100	—	—	ns	
	Ft1	Timer1 oscillator input frequency range (oscillator enabled by setting bit T1OSCEN)			DC	—	200	kHz	
48	TCKEZtmr1	Delay from external clock edge to timer increment			2Tosc	—	7Tosc	—	

Legend: * These parameters are characterized but not tested.
† Data in "Typ" column is at 5V, 25°C unless otherwise stated. These parameters are for design guidance only and are not tested.

FIGURE 15-9: CAPTURE/COMPARE/PWM TIMINGS (CCP1 AND CCP2)

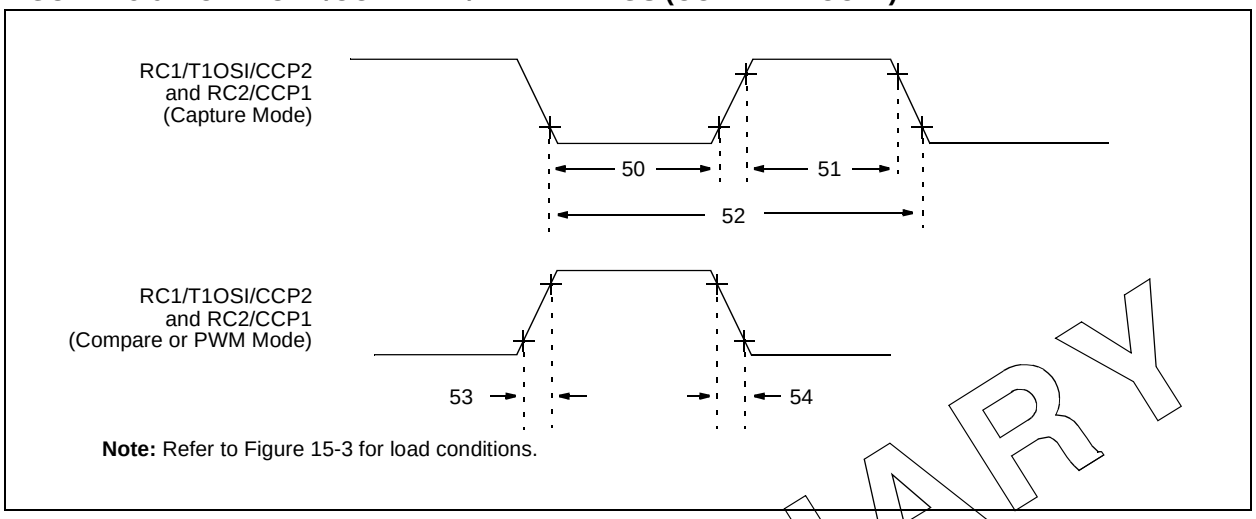

Note: Refer to Figure 15-3 for load conditions.

PRELIMINARY

TABLE 15-5: CAPTURE/COMPARE/PWM REQUIREMENTS (CCP1 AND CCP2)

Param No.	Sym	Characteristic			Min	Typ†	Max	Units	Conditions
50*	TccL	CCP1 and CCP2 input low time	No Prescaler		0.5TCY + 20	—	—	ns	
			With Prescaler	Standard(**F**)	10	—	—	ns	
				Extended(**LF**)	20	—	—	ns	
51*	TccH	CCP1 and CCP2 input high time	No Prescaler		0.5TCY + 20	—	—	ns	
			With Prescaler	Standard(**F**)	10	—	—	ns	
				Extended(**LF**)	20	—	—	ns	
52*	TccP	CCP1 and CCP2 input period			3TCY + 40 / N	—	—	ns	N = prescale value (1,4 or 16)
53*	TccR	CCP1 and CCP2 output rise time		Standard(**F**)	—	10	25	ns	
				Extended(**LF**)	—	25	50	ns	
54*	TccF	CCP1 and CCP2 output fall time		Standard(**F**)	—	10	25	ns	
				Extended(**LF**)	—	25	45	ns	

Legend: * These parameters are characterized but not tested.
† Data in "Typ" column is at 5V, 25°C unless otherwise stated. These parameters are for design guidance only and are not tested.

 © 2000 Microchip Technology Inc.

FIGURE 15-10: PARALLEL SLAVE PORT TIMING (PIC16F74/77 DEVICES ONLY)

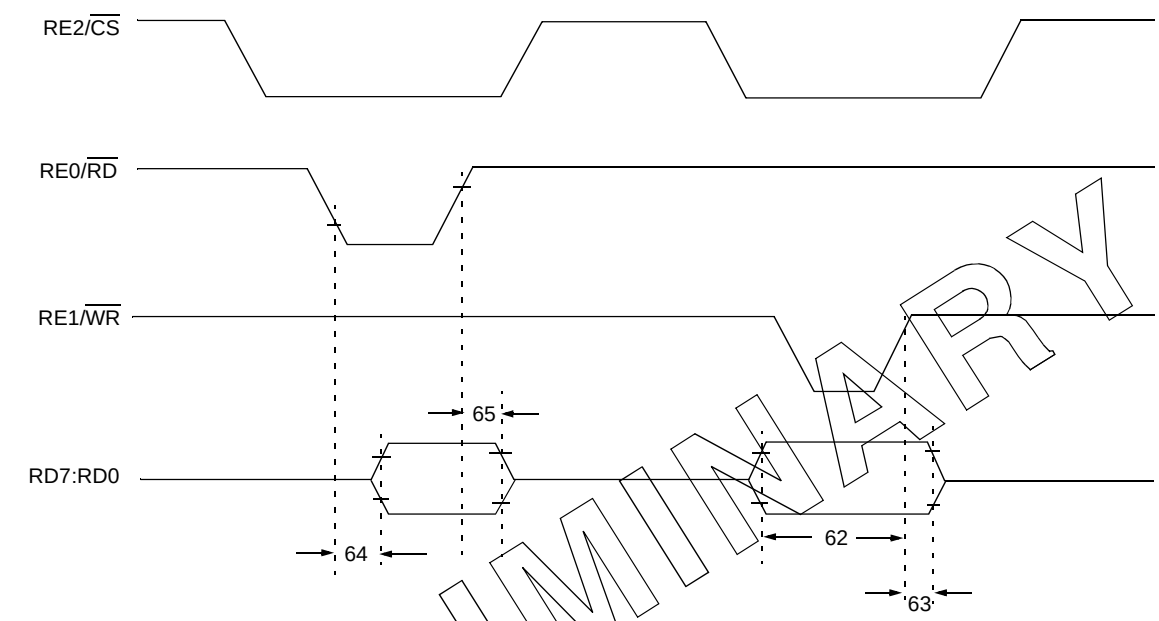

Note: Refer to Figure 15-3 for load conditions.

PRELIMINARY

TABLE 15-6: PARALLEL SLAVE PORT REQUIREMENTS (PIC16F74/77 DEVICES ONLY)

Parameter No.	Sym	Characteristic		Min	Typ†	Max	Units	Conditions
62	TdtV2wrH	Data in valid before $\overline{WR}$↑ or $\overline{CS}$↑ (setup time)		20	—	—	ns	
				25	—	—	ns	Extended Range Only
63*	TwrH2dtI	$\overline{WR}$↑ or $\overline{CS}$↑ to data in invalid (hold time)	Standard(**F**)	20	—	—	ns	
			Extended(**LF**)	35	—	—	ns	
64	TrdL2dtV	$\overline{RD}$↓ and $\overline{CS}$↓ to data out valid		—	—	80	ns	
				—	—	90	ns	Extended Range Only
65	TrdH2dtI	$\overline{RD}$↑ or $\overline{CS}$↓ to data out invalid		10	—	30	ns	

Legend: * These parameters are characterized but not tested.
† Data in "Typ" column is at 5V, 25°C unless otherwise stated. These parameters are for design guidance only and are not tested.

FIGURE 15-11: SPI MASTER MODE TIMING (CKE = 0, SMP = 0)

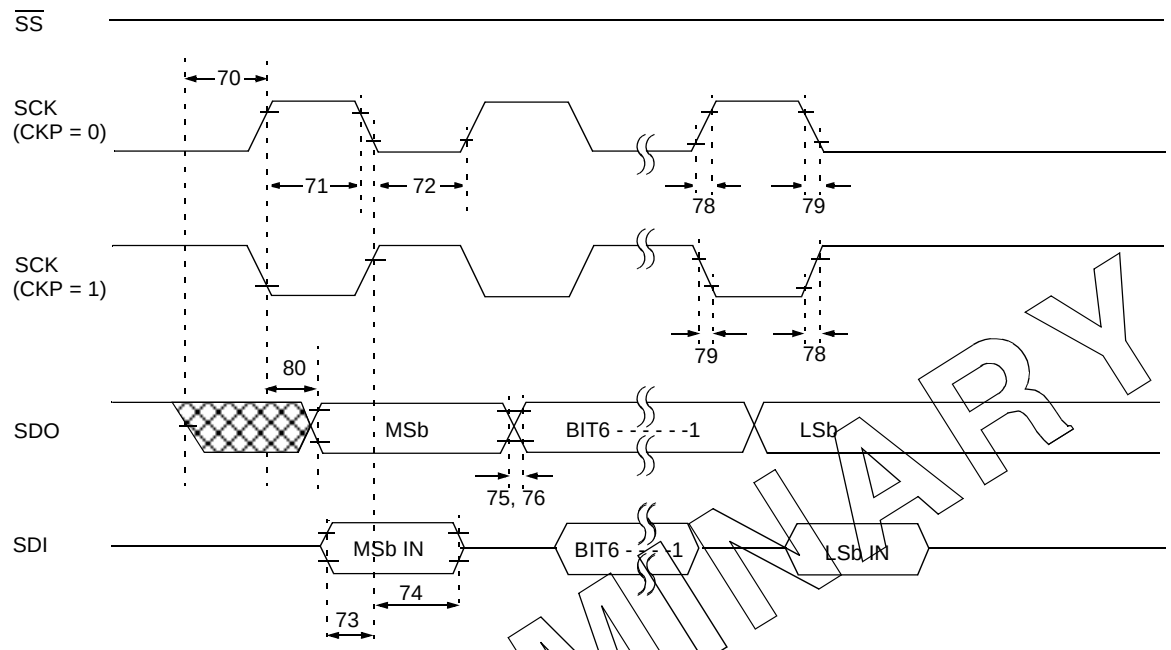

Note: Refer to Figure 15-3 for load conditions.

FIGURE 15-12: SPI MASTER MODE TIMING (CKE = 1, SMP = 1)

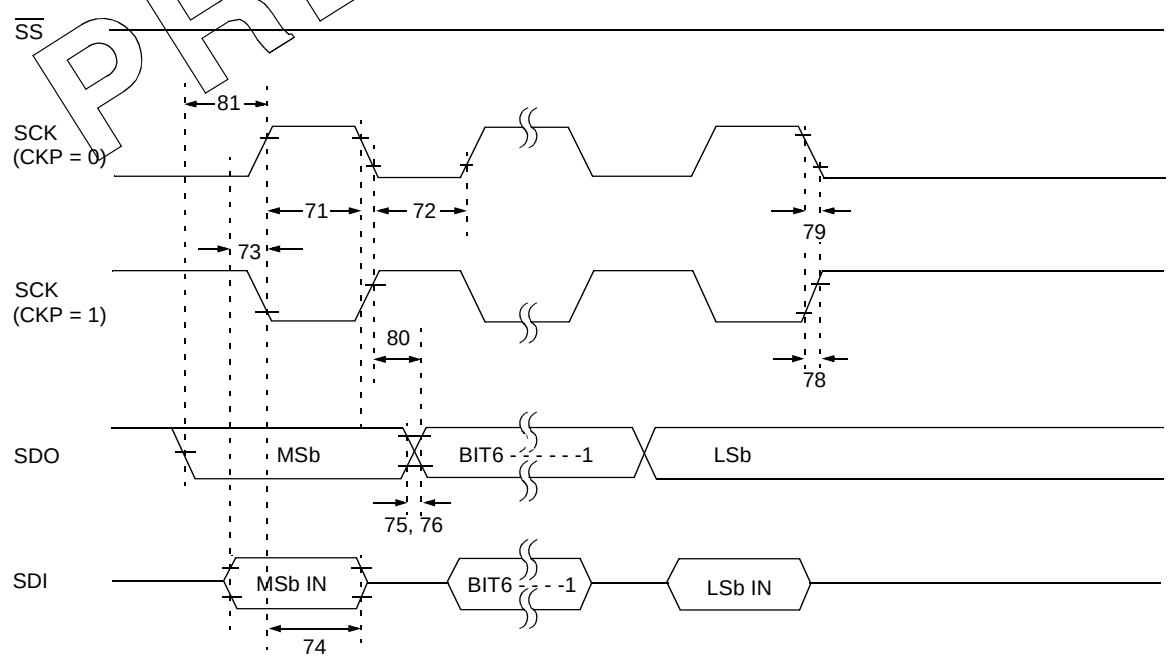

Note: Refer to Figure 15-3 for load conditions.

PRELIMINARY

 © 2000 Microchip Technology Inc.

FIGURE 15-13: SPI SLAVE MODE TIMING (CKE = 0)

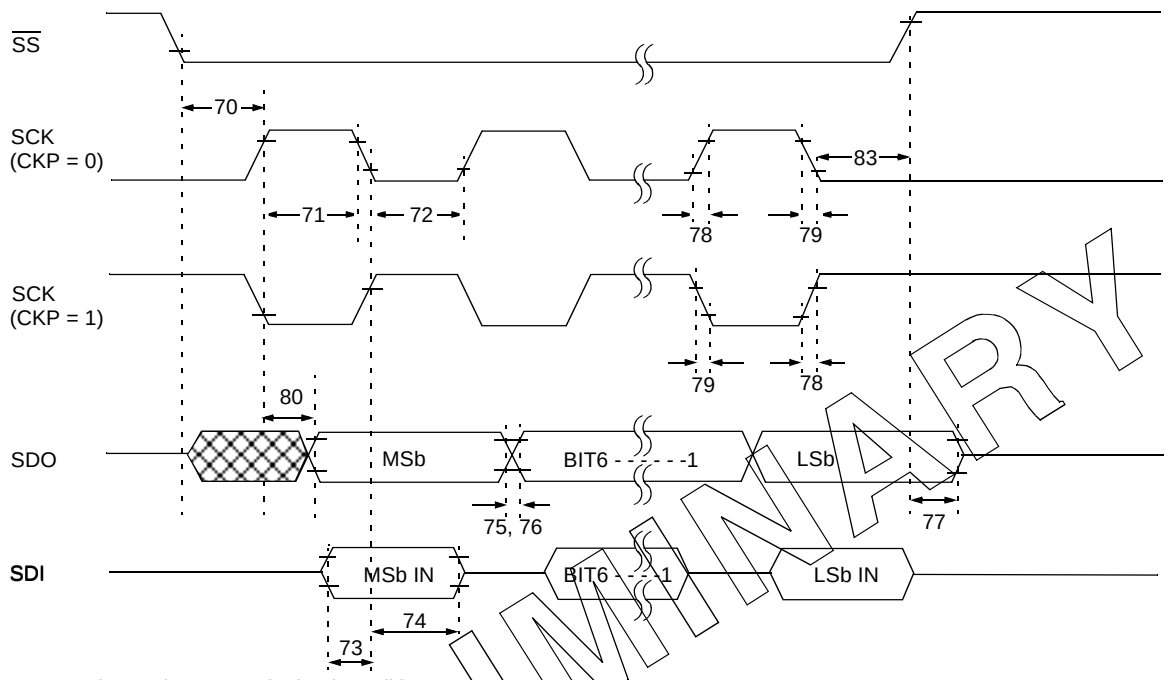

Note: Refer to Figure 15-3 for load conditions.

FIGURE 15-14: SPI SLAVE MODE TIMING (CKE = 1)

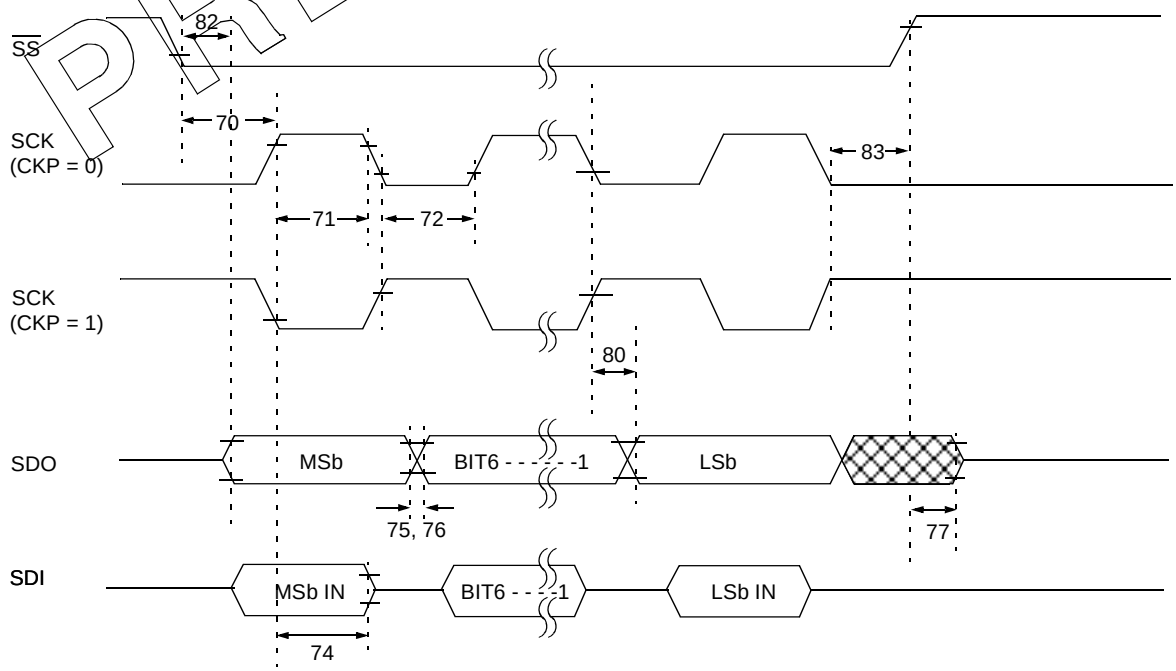

Note: Refer to Figure 15-3 for load conditions.

PRELIMINARY

TABLE 15-7: SPI MODE REQUIREMENTS

Param No.	Sym	Characteristic		Min	Typ†	Max	Units	Conditions
70*	TssL2scH, TssL2scL	$\overline{SS}$↓ to SCK↓ or SCK↑ input		TCY	—	—	ns	
71*	TscH	SCK input high time (Slave mode)		TCY + 20	—	—	ns	
72*	TscL	SCK input low time (Slave mode)		TCY + 20	—	—	ns	
73*	TdiV2scH, TdiV2scL	Setup time of SDI data input to SCK edge		100	—	—	ns	
74*	TscH2diL, TscL2diL	Hold time of SDI data input to SCK edge		100	—	—	ns	
75*	TdoR	SDO data output rise time	Standard(**F**) Extended(**LF**)	— —	10 25	25 50	ns ns	
76*	TdoF	SDO data output fall time		—	10	25	ns	
77*	TssH2doZ	$\overline{SS}$↑ to SDO output hi-impedance		10	—	50	ns	
78*	TscR	SCK output rise time (Master mode)	Standard(**F**) Extended(**LF**)	— —	10 25	25 50	ns ns	
79*	TscF	SCK output fall time (Master mode)		—	10	25	ns	
80*	TscH2doV, TscL2doV	SDO data output valid after SCK edge	Standard(**F**) Extended(**LF**)	— —	— —	50 145	ns ns	
81*	TdoV2scH, TdoV2scL	SDO data output setup to SCK edge		TCY	—	—	ns	
82*	TssL2doV	SDO data output valid after $\overline{SS}$↓ edge		—	—	50	ns	
83*	TscH2ssH, TscL2ssH	$\overline{SS}$ ↑ after SCK edge		1.5TCY + 40	—	—	ns	

Legend: * These parameters are characterized but not tested.
† Data in "Typ" column is at 5V, 25°C unless otherwise stated. These parameters are for design guidance only and are not tested.

PRELIMINARY

FIGURE 15-15: I²C BUS START/STOP BITS TIMING

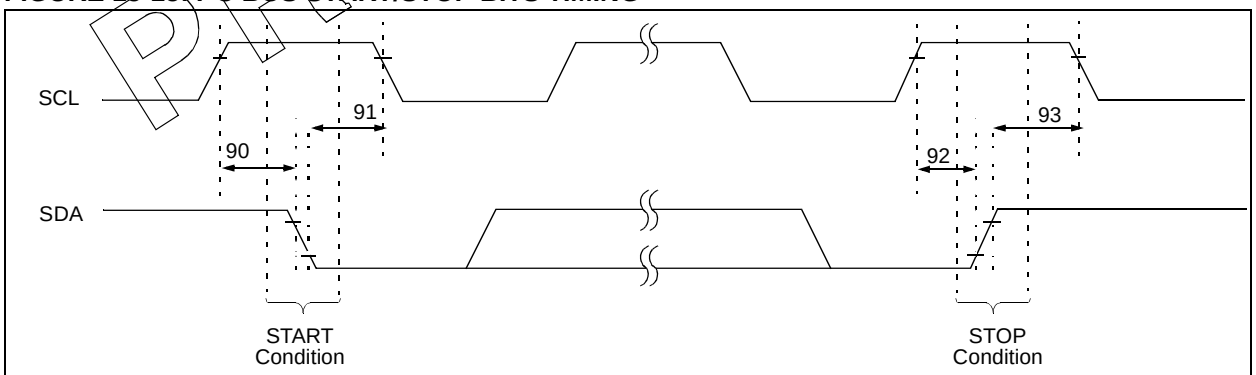

Note: Refer to Figure 15-3 for load conditions.

 © 2000 Microchip Technology Inc.

TABLE 15-8: I²C BUS START/STOP BITS REQUIREMENTS

Param No.	Sym	Characteristic		Min	Typ	Max	Units	Conditions
90*	TSU:STA	START condition Setup time	100 kHz mode	4700	—	—	ns	Only relevant for Repeated START condition
			400 kHz mode	600	—	—		
91*	THD:STA	START condition Hold time	100 kHz mode	4000	—	—	ns	After this period the first clock pulse is generated
			400 kHz mode	600	—	—		
92*	TSU:STO	STOP condition Setup time	100 kHz mode	4700	—	—	ns	
			400 kHz mode	600	—	—		
93	THD:STO	STOP condition Hold time	100 kHz mode	4000	—	—	ns	
			400 kHz mode	600	—	—		

* These parameters are characterized but not tested.

FIGURE 15-16: I²C BUS DATA TIMING

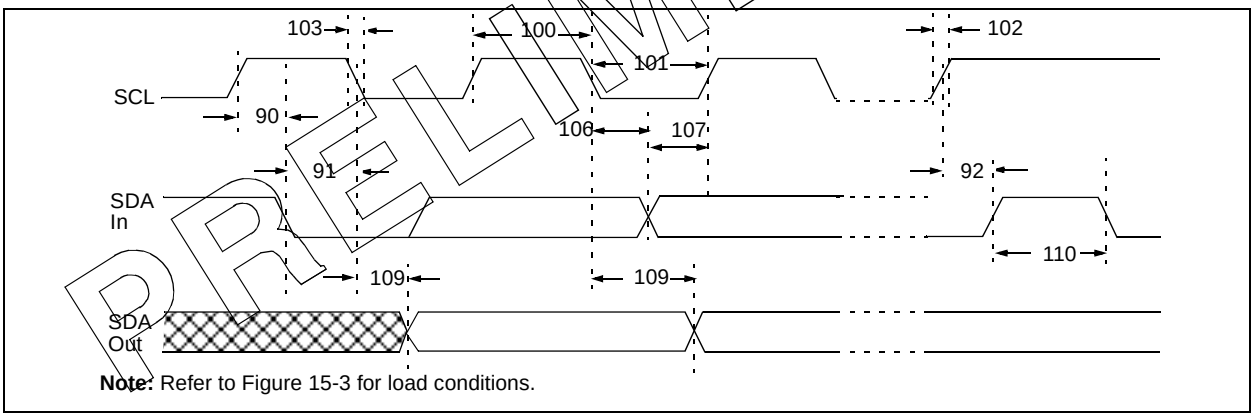

Note: Refer to Figure 15-3 for load conditions.

PRELIMINARY

TABLE 15-9: I²C BUS DATA REQUIREMENTS

Param. No.	Sym	Characteristic		Min	Max	Units	Conditions
100*	THIGH	Clock high time	100 kHz mode	4.0	—	µs	Device must operate at a minimum of 1.5 MHz
			400 kHz mode	0.6	—	µs	Device must operate at a minimum of 10 MHz
			SSP Module	1.5TCY	—		
101*	TLOW	Clock low time	100 kHz mode	4.7	—	µs	Device must operate at a minimum of 1.5 MHz
			400 kHz mode	1.3	—	µs	Device must operate at a minimum of 10 MHz
			SSP Module	1.5TCY	—		
102*	TR	SDA and SCL rise time	100 kHz mode	—	1000	ns	
			400 kHz mode	20 + 0.1Cb	300	ns	Cb is specified to be from 10-400 pF
103*	TF	SDA and SCL fall time	100 kHz mode	—	300	ns	
			400 kHz mode	20 + 0.1Cb	300	ns	Cb is specified to be from 10-400 pF
90*	TSU:STA	START condition setup time	100 kHz mode	4.7	—	µs	Only relevant for Repeated START condition
			400 kHz mode	0.6	—	µs	
91*	THD:STA	START condition hold time	100 kHz mode	4.0	—	µs	After this period the first clock pulse is generated
			400 kHz mode	0.6	—	µs	
106*	THD:DAT	Data input hold time	100 kHz mode	0	—	ns	
			400 kHz mode	0	0.9	µs	
107*	TSU:DAT	Data input setup time	100 kHz mode	250	—	ns	**(Note 2)**
			400 kHz mode	100	—	ns	
92*	TSU:STO	STOP condition setup time	100 kHz mode	4.7	—	µs	
			400 kHz mode	0.6	—	µs	
109*	TAA	Output valid from clock	100 kHz mode	—	3500	ns	**(Note 1)**
			400 kHz mode	—	—	ns	
110*	TBUF	Bus free time	100 kHz mode	4.7	—	µs	Time the bus must be free before a new transmission can start
			400 kHz mode	1.3	—	µs	
	Cb	Bus capacitive loading		—	400	pF	

* These parameters are characterized but not tested.

Note 1: As a transmitter, the device must provide this internal minimum delay time to bridge the undefined region (min. 300 ns) of the falling edge of SCL to avoid unintended generation of START or STOP conditions.

2: A fast mode (400 kHz) I²C-bus device can be used in a standard mode (100 kHz) I²C bus system, but the requirement Tsu:DAT ≥ 250 ns must then be met. This will automatically be the case if the device does not stretch the LOW period of the SCL signal. If such a device does stretch the LOW period of the SCL signal, it must output the next data bit to the SDA line TR max.+tsu;DAT = 1000 + 250 = 1250 ns (according to the standard mode I²C bus specification), before the SCL line is released.

PRELIMINARY

 © 2000 Microchip Technology Inc.

FIGURE 15-17: USART SYNCHRONOUS TRANSMISSION (MASTER/SLAVE) TIMING

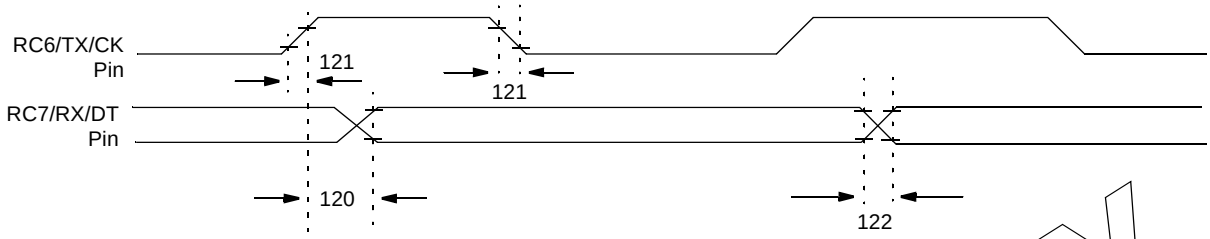

Note: Refer to Figure 15-3 for load conditions.

TABLE 15-10: USART SYNCHRONOUS TRANSMISSION REQUIREMENTS

Param No.	Sym	Characteristic		Min	Typ†	Max	Units	Conditions
120	TckH2dtV	SYNC XMIT (MASTER & SLAVE) Clock high to data out valid	Standard(**F**)	—	—	80	ns	
			Extended(**LF**)	—	—	100	ns	
121	Tckrf	Clock out rise time and fall time (Master mode)	Standard(**F**)	—	—	45	ns	
			Extended(**LF**)	—	—	50	ns	
122	Tdtrf	Data out rise time and fall time	Standard(**F**)	—	—	45	ns	
			Extended(**LF**)	—	—	50	ns	

†: Data in “Typ” column is at 5V, 25°C unless otherwise stated. These parameters are for design guidance only and are not tested.

FIGURE 15-18: USART SYNCHRONOUS RECEIVE (MASTER/SLAVE) TIMING

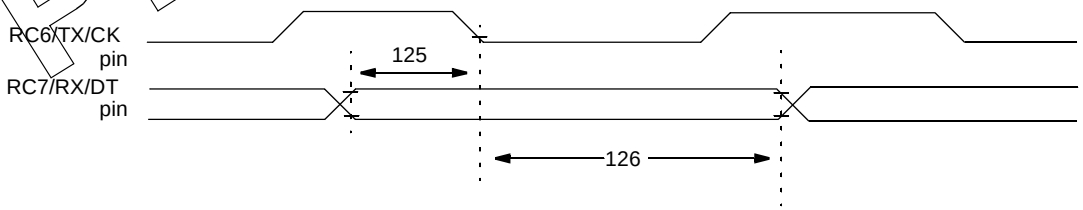

Note: Refer to Figure 15-3 for load conditions.

TABLE 15-11: USART SYNCHRONOUS RECEIVE REQUIREMENTS

Parameter No.	Sym	Characteristic	Min	Typ†	Max	Units	Conditions
125	TdtV2ckL	SYNC RCV (MASTER & SLAVE) Data setup before CK ↓ (DT setup time)	15	—	—	ns	
126	TckL2dtl	Data hold after CK ↓ (DT hold time)	15	—	—	ns	

†: Data in “Typ” column is at 5V, 25°C unless otherwise stated. These parameters are for design guidance only and are not tested.

PRELIMINARY

TABLE 15-12: A/D CONVERTER CHARACTERISTICS: PIC16F7X (INDUSTRIAL)
PIC16LF7X (INDUSTRIAL)

Param No.	Sym	Characteristic		Min	Typ†	Max	Units	Conditions
A01	NR	Resolution	PIC16F7X	—	—	8 bits	bit	VREF = VDD = 5.12V, VSS ≤ VAIN ≤ VREF
			PIC16LF7X	—	—	8 bits	bit	VREF = VDD = 2.0V
A02	EABS	Total Absolute error		—	—	< ± 1	LSb	VREF = VDD = 5.12V, VSS ≤ VAIN ≤ VREF
A03	EIL	Integral linearity error		—	—	< ± 1	LSb	VREF = VDD = 5.12V, VSS ≤ VAIN ≤ VREF
A04	EDL	Differential linearity error		—	—	< ± 1	LSb	VREF = VDD = 5.12V, VSS ≤ VAIN ≤ VREF
A05	EFS	Full scale error		—	—	< ± 1	LSb	VREF = VDD = 5.12V, VSS ≤ VAIN ≤ VREF
A06	EOFF	Offset error		—	—	< ± 1	LSb	VREF = VDD = 5.12V, VSS ≤ VAIN ≤ VREF
A10	—	Monotonicity **(Note 3)**		—	guaranteed	—	—	VSS ≤ VAIN ≤ VREF
A20	VREF	Reference voltage		2.0V	—	VDD + 0.3	V	
A25	VAIN	Analog input voltage		VSS - 0.3	—	VREF + 0.3	V	
A30	ZAIN	Recommended impedance of analog voltage source		—	—	10.0	kΩ	
A40	IAD	A/D conversion current (VDD)	PIC16F7X	—	180	—	μA	Average current consumption when A/D is on **(Note 1)**.
			PIC16LF7X	—	90	—	μA	
A50	IREF	VREF input current **(Note 2)**		10	—	1000	μA	During VAIN acquisition. Based on differential of VHOLD to VAIN to charge CHOLD, see Section 12.1.
				—	—	10	μA	During A/D Conversion cycle.

* These parameters are characterized but not tested.

†Data in "Typ" column is at 5V, 25°C unless otherwise stated. These parameters are for design guidance only and are not tested.

Note 1: When A/D is off, it will not consume any current other than minor leakage current. The power-down current spec includes any such leakage from the A/D module.

2: VREF current is from the RA3 pin or the VDD pin, whichever is selected as a reference input.

3: The A/D conversion result never decreases with an increase in the input voltage and has no missing codes.

PRELIMINARY

 © 2000 Microchip Technology Inc.

FIGURE 15-19: A/D CONVERSION TIMING

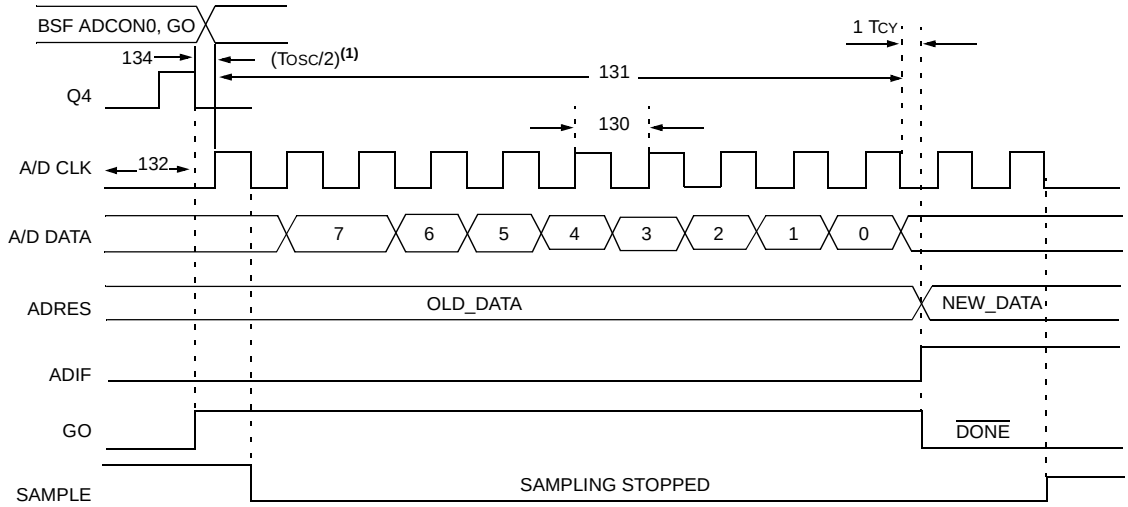

Note 1: If the A/D clock source is selected as RC, a time of TCY is added before the A/D clock starts. This allows the SLEEP instruction to be executed.

TABLE 15-13: A/D CONVERSION REQUIREMENTS

Param No.	Sym	Characteristic		Min	Typ†	Max	Units	Conditions
130	TAD	A/D clock period	PIC16F7X	1.6	—	—	µs	TOSC based, VREF ≥ 3.0V
			PIC16LF7X	2.0	—	—	µs	TOSC based, 2.0V ≤ VREF ≤ 5.5V
			PIC16F7X	2.0	4.0	6.0	µs	A/D RC mode
			PIC16LF7X	3.0	6.0	9.0	µs	A/D RC mode
131	TCNV	Conversion time (not including S/H time) **(Note 1)**		9	—	9	TAD	
132	TACQ	Acquisition time		5*	—	—	µs	The minimum time is the amplifier settling time. This may be used if the "new" input voltage has not changed by more than 1 LSb (i.e., 20.0 mV @ 5.12V) from the last sampled voltage (as stated on CHOLD).
134	TGO	Q4 to A/D clock start		—	TOSC/2	—	—	If the A/D clock source is selected as RC, a time of TCY is added before the A/D clock starts. This allows the SLEEP instruction to be executed.
135	TSWC	Switching from convert → sample time		1.5 §	—	—	TAD	

* These parameters are characterized but not tested.

† Data in "Typ" column is at 5V, 25°C unless otherwise stated. These parameters are for design guidance only and are not tested.

Note 1: ADRES register may be read on the following TCY cycle.

2: See Section 12.1 for min. conditions.

NOTES:

 © 2000 Microchip Technology Inc.

16.0 DC AND AC CHARACTERISTICS GRAPHS AND TABLES

The graphs and tables provided in this section are for **design guidance** and are **not tested**.

In some graphs or tables, the data presented are **outside specified operating range** (i.e., outside specified V_{DD} range). This is for **information only** and devices are ensured to operate properly only within the specified range.

The data presented in this section is a **statistical summary** of data collected on units from different lots over a period of time and matrix samples. 'Typical' represents the mean of the distribution at 25°C. 'Max' or 'Min' represents (mean + 3σ) or (mean - 3σ), respectively, where σ is standard deviation over the whole temperature range.

Graphs and Tables not available at this time.

NOTES:

 © 2000 Microchip Technology Inc.

17.0 PACKAGING INFORMATION

17.1 Package Marking Information

28-Lead PDIP (Skinny DIP)

```
XXXXXXXXXXXXXXXXXX
XXXXXXXXXXXXXXXXXX
YYWWNNNN
```

Example

```
PIC16F77-I/SP
0017HAT
```

28-Lead SOIC

```
XXXXXXXXXXXXXXXXXXXX
XXXXXXXXXXXXXXXXXXXX
XXXXXXXXXXXXXXXXXXXX
YYWWNNNN
```

Example

```
PIC16F76-I/SO
0010SAA
```

28-Lead SSOP

```
XXXXXXXXXXXXX
XXXXXXXXXXXXX
YYWWNNNN
```

Example

```
PIC16F73-I/SS
0010SBP
```

Legend:	XX...X	Customer specific information*
	YY	Year code (last 2 digits of calendar year)
	WW	Week code (week of January 1 is week ‘01’)
	NNN	Alphanumeric traceability code

Note: In the event the full Microchip part number cannot be marked on one line, it will be carried over to the next line, thus limiting the number of available characters for customer specific information.

* Standard marking consists of Microchip part number, year code, week code, and traceability code. For marking beyond this, certain price adders apply. Please check with your Microchip Sales Office. For QTP devices, any special marking adders are included in QTP price.

Package Marking Information (Cont'd)

40-Lead PDIP

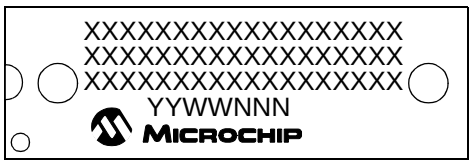

Example

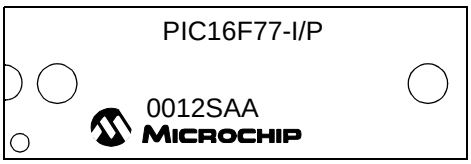

44-Lead TQFP

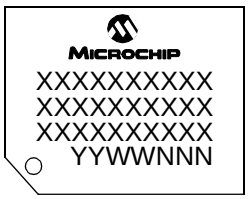

Example

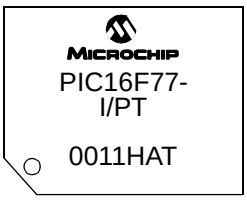

44-Lead PLCC

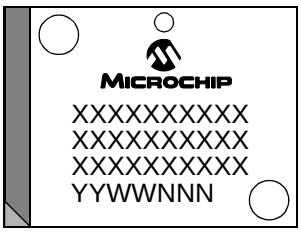

Example

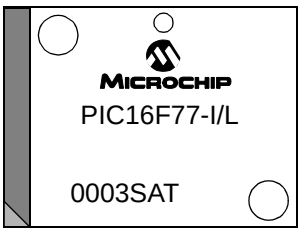

 © 2000 Microchip Technology Inc.

17.2 28-Lead Skinny Plastic Dual In-line (SP) – 300 mil (PDIP)

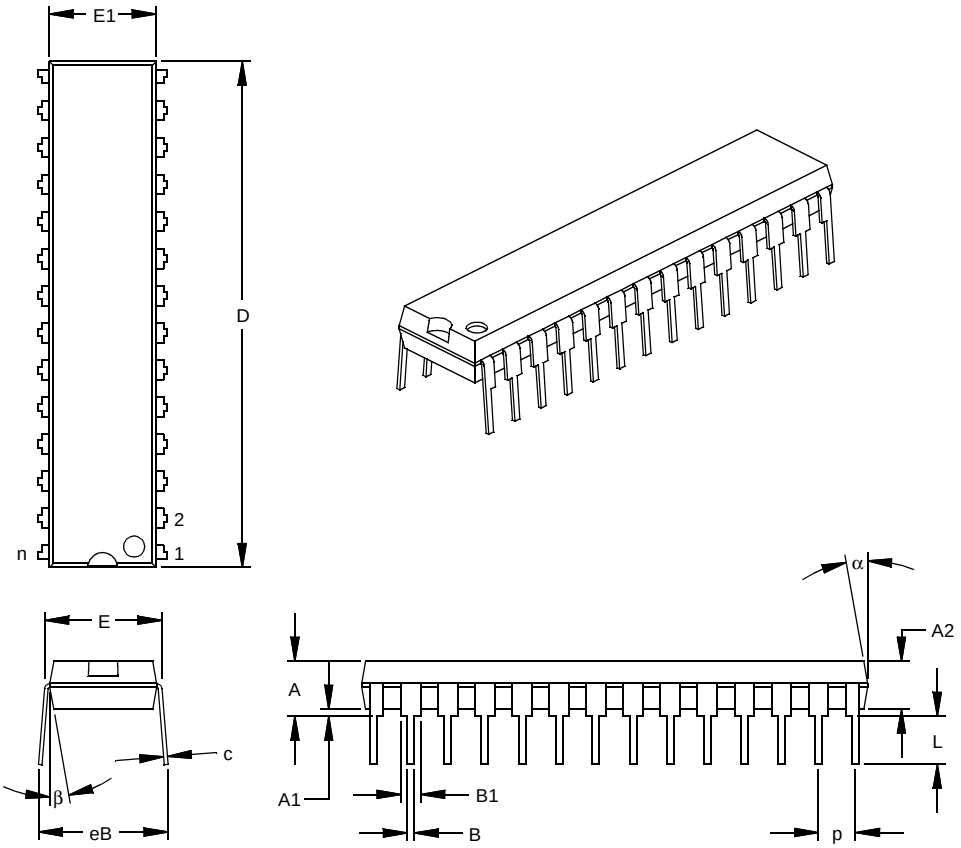

Units		INCHES*			MILLIMETERS		
Dimension Limits		MIN	NOM	MAX	MIN	NOM	MAX
Number of Pins	n		28			28	
Pitch	p		.100			2.54	
Top to Seating Plane	A	.140	.150	.160	3.56	3.81	4.06
Molded Package Thickness	A2	.125	.130	.135	3.18	3.30	3.43
Base to Seating Plane	A1	.015			0.38		
Shoulder to Shoulder Width	E	.300	.310	.325	7.62	7.87	8.26
Molded Package Width	E1	.275	.285	.295	6.99	7.24	7.49
Overall Length	D	1.345	1.365	1.385	34.16	34.67	35.18
Tip to Seating Plane	L	.125	.130	.135	3.18	3.30	3.43
Lead Thickness	c	.008	.012	.015	0.20	0.29	0.38
Upper Lead Width	B1	.040	.053	.065	1.02	1.33	1.65
Lower Lead Width	B	.016	.019	.022	0.41	0.48	0.56
Overall Row Spacing §	eB	.320	.350	.430	8.13	8.89	10.92
Mold Draft Angle Top	α	5	10	15	5	10	15
Mold Draft Angle Bottom	β	5	10	15	5	10	15

* Controlling Parameter
§ Significant Characteristic
Notes:
Dimension D and E1 do not include mold flash or protrusions. Mold flash or protrusions shall not exceed .010” (0.254mm) per side.
JEDEC Equivalent: MO-095
Drawing No. C04-070

17.3 28-Lead Plastic Small Outline (SO) – Wide, 300 mil (SOIC)

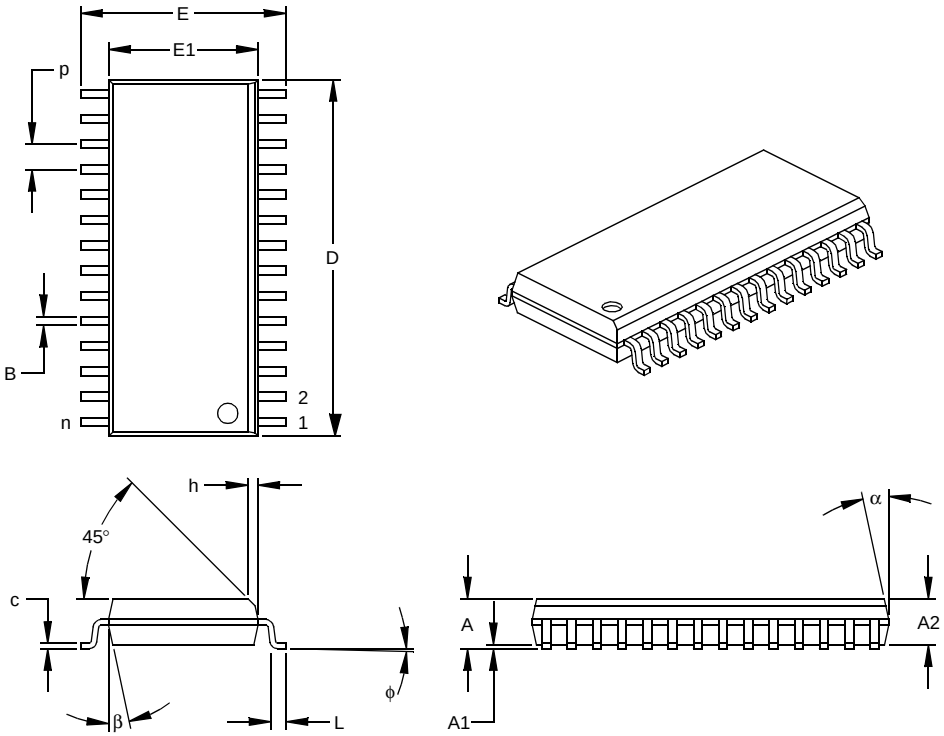

Units		INCHES*			MILLIMETERS		
Dimension Limits		MIN	NOM	MAX	MIN	NOM	MAX
Number of Pins	n		28			28	
Pitch	p		.050			1.27	
Overall Height	A	.093	.099	.104	2.36	2.50	2.64
Molded Package Thickness	A2	.088	.091	.094	2.24	2.31	2.39
Standoff §	A1	.004	.008	.012	0.10	0.20	0.30
Overall Width	E	.394	.407	.420	10.01	10.34	10.67
Molded Package Width	E1	.288	.295	.299	7.32	7.49	7.59
Overall Length	D	.695	.704	.712	17.65	17.87	18.08
Chamfer Distance	h	.010	.020	.029	0.25	0.50	0.74
Foot Length	L	.016	.033	.050	0.41	0.84	1.27
Foot Angle Top	φ	0	4	8	0	4	8
Lead Thickness	c	.009	.011	.013	0.23	0.28	0.33
Lead Width	B	.014	.017	.020	0.36	0.42	0.51
Mold Draft Angle Top	α	0	12	15	0	12	15
Mold Draft Angle Bottom	β	0	12	15	0	12	15

* Controlling Parameter
§ Significant Characteristic

Notes:
Dimensions D and E1 do not include mold flash or protrusions. Mold flash or protrusions shall not exceed .010” (0.254mm) per side.
JEDEC Equivalent: MS-013
Drawing No. C04-052

 © 2000 Microchip Technology Inc.

17.4 28-Lead Plastic Shrink Small Outline (SS) – 209 mil, 5.30 mm (SSOP)

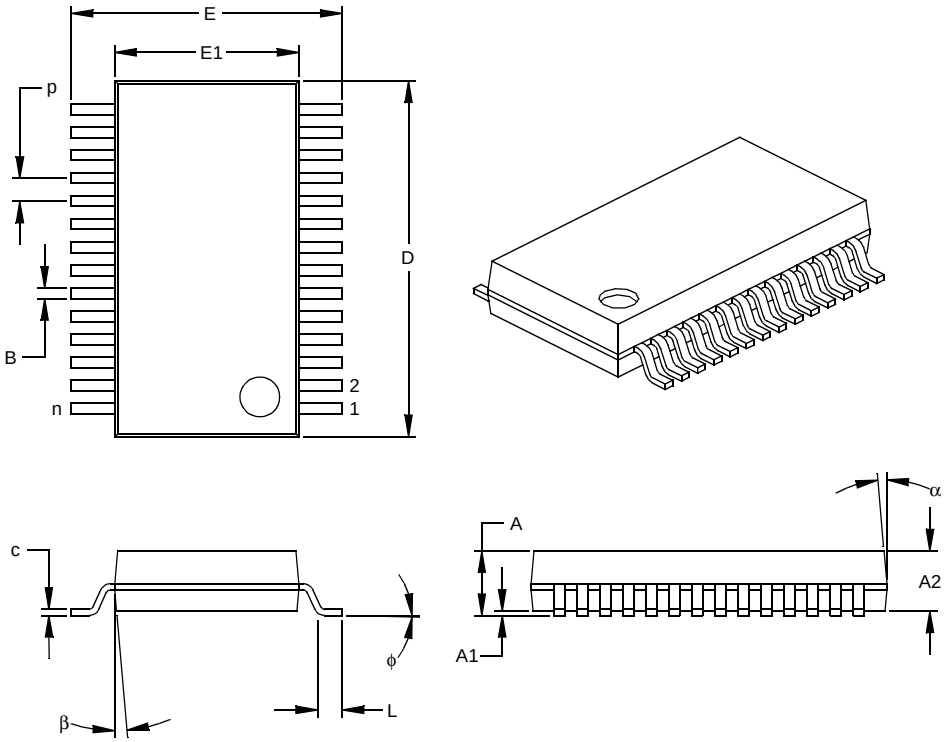

Units		INCHES			MILLIMETERS*		
Dimension Limits		MIN	NOM	MAX	MIN	NOM	MAX
Number of Pins	n		28			28	
Pitch	p		.026			0.65	
Overall Height	A	.068	.073	.078	1.73	1.85	1.98
Molded Package Thickness	A2	.064	.068	.072	1.63	1.73	1.83
Standoff §	A1	.002	.006	.010	0.05	0.15	0.25
Overall Width	E	.299	.309	.319	7.59	7.85	8.10
Molded Package Width	E1	.201	.207	.212	5.11	5.25	5.38
Overall Length	D	.396	.402	.407	10.06	10.20	10.34
Foot Length	L	.022	.030	.037	0.56	0.75	0.94
Lead Thickness	c	.004	.007	.010	0.10	0.18	0.25
Foot Angle	φ	0	4	8	0.00	101.60	203.20
Lead Width	B	.010	.013	.015	0.25	0.32	0.38
Mold Draft Angle Top	α	0	5	10	0	5	10
Mold Draft Angle Bottom	β	0	5	10	0	5	10

* Controlling Parameter
§ Significant Characteristic

Notes:
Dimensions D and E1 do not include mold flash or protrusions. Mold flash or protrusions shall not exceed .010” (0.254mm) per side.
JEDEC Equivalent: MS-150
Drawing No. C04-073

17.5 40-Lead Plastic Dual In-line (P) – 600 mil (PDIP)

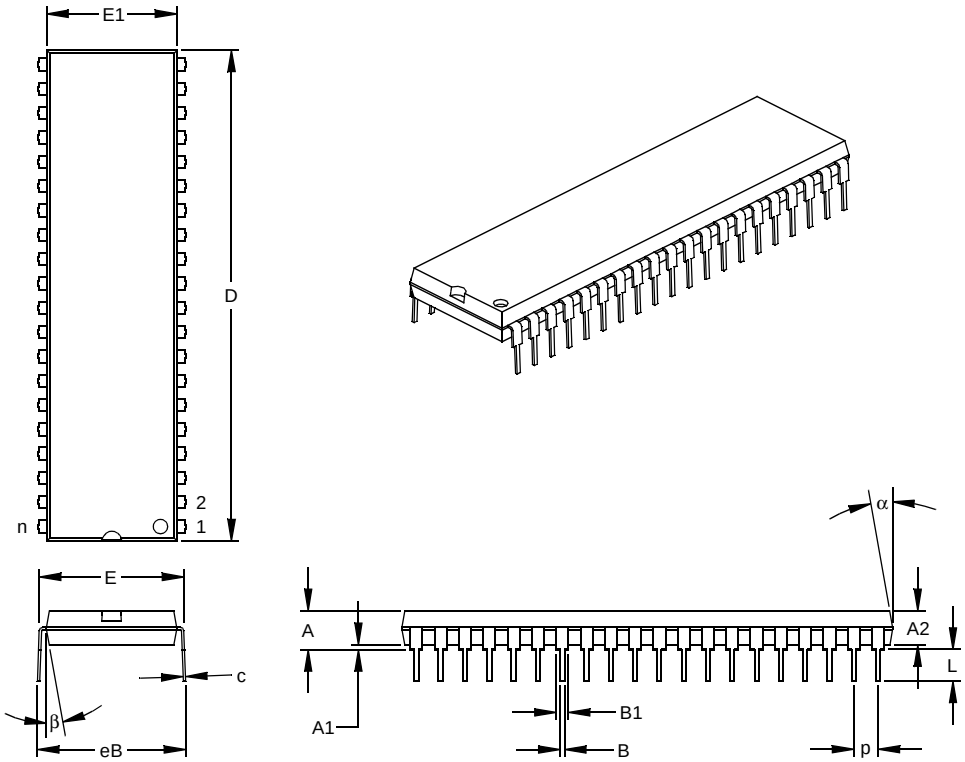

Units		INCHES*			MILLIMETERS		
Dimension Limits		MIN	NOM	MAX	MIN	NOM	MAX
Number of Pins	n		40			40	
Pitch	p		.100			2.54	
Top to Seating Plane	A	.160	.175	.190	4.06	4.45	4.83
Molded Package Thickness	A2	.140	.150	.160	3.56	3.81	4.06
Base to Seating Plane	A1	.015			0.38		
Shoulder to Shoulder Width	E	.595	.600	.625	15.11	15.24	15.88
Molded Package Width	E1	.530	.545	.560	13.46	13.84	14.22
Overall Length	D	2.045	2.058	2.065	51.94	52.26	52.45
Tip to Seating Plane	L	.120	.130	.135	3.05	3.30	3.43
Lead Thickness	c	.008	.012	.015	0.20	0.29	0.38
Upper Lead Width	B1	.030	.050	.070	0.76	1.27	1.78
Lower Lead Width	B	.014	.018	.022	0.36	0.46	0.56
Overall Row Spacing §	eB	.620	.650	.680	15.75	16.51	17.27
Mold Draft Angle Top	α	5	10	15	5	10	15
Mold Draft Angle Bottom	β	5	10	15	5	10	15

* Controlling Parameter
§ Significant Characteristic
Notes:
Dimensions D and E1 do not include mold flash or protrusions. Mold flash or protrusions shall not exceed .010” (0.254mm) per side.
JEDEC Equivalent: MO-011
Drawing No. C04-016

 © 2000 Microchip Technology Inc.

17.6 44-Lead Plastic Thin Quad Flatpack (PT) 10x10x1 mm Body, 1.0/0.10 mm Lead Form (TQFP)

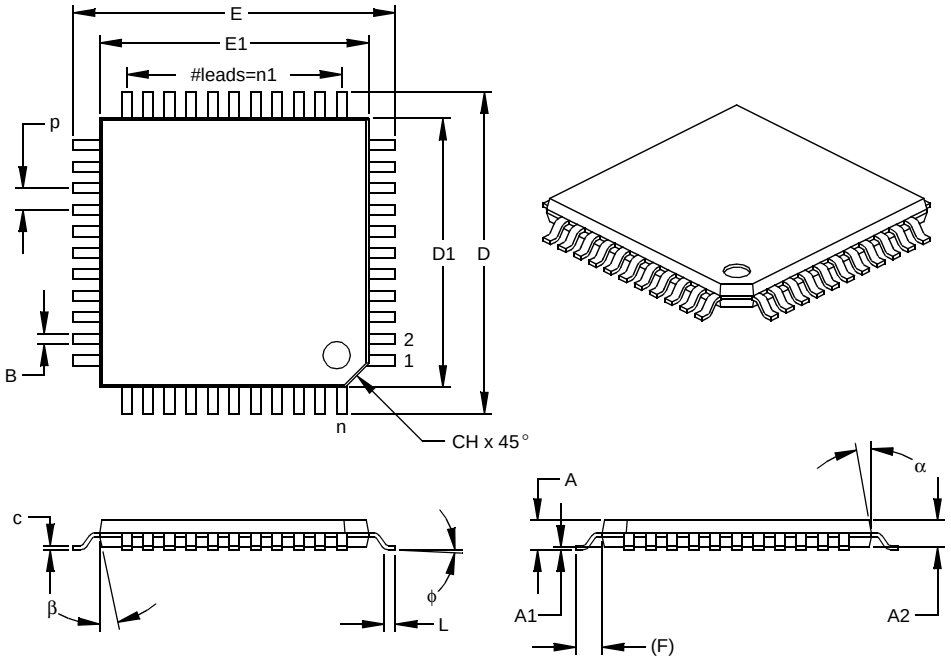

Units		INCHES			MILLIMETERS*		
Dimension Limits		MIN	NOM	MAX	MIN	NOM	MAX
Number of Pins	n		44			44	
Pitch	p		.031			0.80	
Pins per Side	n1		11			11	
Overall Height	A	.039	.043	.047	1.00	1.10	1.20
Molded Package Thickness	A2	.037	.039	.041	0.95	1.00	1.05
Standoff §	A1	.002	.004	.006	0.05	0.10	0.15
Foot Length	L	.018	.024	.030	0.45	0.60	0.75
Footprint (Reference)	(F)		.039		1.00		
Foot Angle	φ	0	3.5	7	0	3.5	7
Overall Width	E	.463	.472	.482	11.75	12.00	12.25
Overall Length	D	.463	.472	.482	11.75	12.00	12.25
Molded Package Width	E1	.390	.394	.398	9.90	10.00	10.10
Molded Package Length	D1	.390	.394	.398	9.90	10.00	10.10
Lead Thickness	c	.004	.006	.008	0.09	0.15	0.20
Lead Width	B	.012	.015	.017	0.30	0.38	0.44
Pin 1 Corner Chamfer	CH	.025	.035	.045	0.64	0.89	1.14
Mold Draft Angle Top	α	5	10	15	5	10	15
Mold Draft Angle Bottom	β	5	10	15	5	10	15

* Controlling Parameter
§ Significant Characteristic

Notes:
Dimensions D1 and E1 do not include mold flash or protrusions. Mold flash or protrusions shall not exceed .010” (0.254mm) per side.
JEDEC Equivalent: MS-026
Drawing No. C04-076

17.7 44-Lead Plastic Leaded Chip Carrier (L) – Square (PLCC)

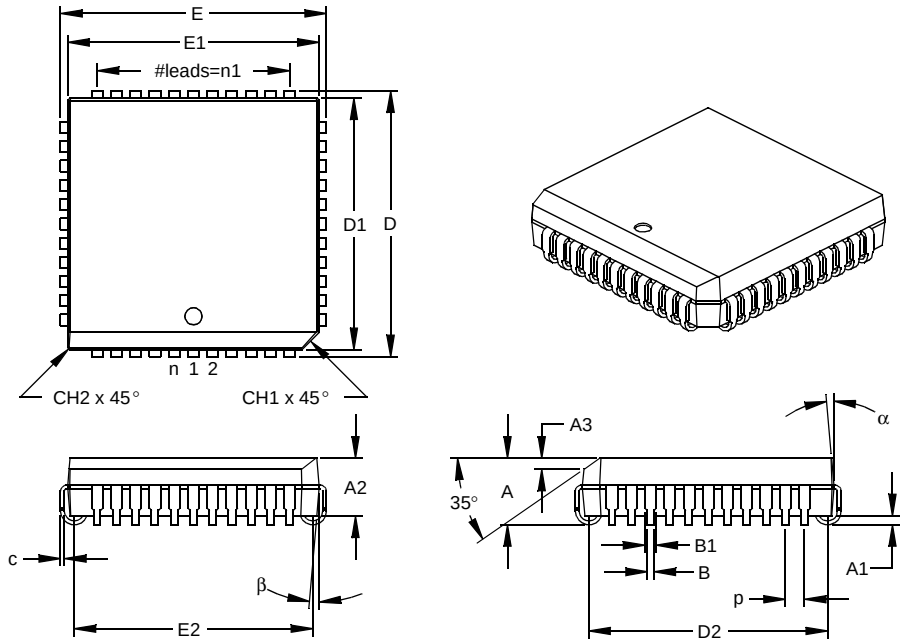

Units		INCHES*			MILLIMETERS		
Dimension Limits		MIN	NOM	MAX	MIN	NOM	MAX
Number of Pins	n		44			44	
Pitch	p		.050			1.27	
Pins per Side	n1		11			11	
Overall Height	A	.165	.173	.180	4.19	4.39	4.57
Molded Package Thickness	A2	.145	.153	.160	3.68	3.87	4.06
Standoff §	A1	.020	.028	.035	0.51	0.71	0.89
Side 1 Chamfer Height	A3	.024	.029	.034	0.61	0.74	0.86
Corner Chamfer 1	CH1	.040	.045	.050	1.02	1.14	1.27
Corner Chamfer (others)	CH2	.000	.005	.010	0.00	0.13	0.25
Overall Width	E	.685	.690	.695	17.40	17.53	17.65
Overall Length	D	.685	.690	.695	17.40	17.53	17.65
Molded Package Width	E1	.650	.653	.656	16.51	16.59	16.66
Molded Package Length	D1	.650	.653	.656	16.51	16.59	16.66
Footprint Width	E2	.590	.620	.630	14.99	15.75	16.00
Footprint Length	D2	.590	.620	.630	14.99	15.75	16.00
Lead Thickness	c	.008	.011	.013	0.20	0.27	0.33
Upper Lead Width	B1	.026	.029	.032	0.66	0.74	0.81
Lower Lead Width	B	.013	.020	.021	0.33	0.51	0.53
Mold Draft Angle Top	α	0	5	10	0	5	10
Mold Draft Angle Bottom	β	0	5	10	0	5	10

* Controlling Parameter
§ Significant Characteristic
Notes:
Dimensions D and E1 do not include mold flash or protrusions. Mold flash or protrusions shall not exceed .010” (0.254mm) per side.
JEDEC Equivalent: MO-047
Drawing No. C04-048

 © 2000 Microchip Technology Inc.

APPENDIX A: REVISION HISTORY

Version	Date	Revision Description
A	2000	This is a new data sheet. However, these devices are similar to the PIC16C7X devices found in the PIC16C7X Data Sheet (DS30390) or the PIC16F87X devices (DS30292).

APPENDIX B: DEVICE DIFFERENCES

The differences between the devices in this data sheet are listed in Table B-1.

TABLE B-1: DEVICE DIFFERENCES

Difference	PIC16F76/73	PIC16F77/74
A/D	5 channels, 8-bits	8 channels, 8-bits
Parallel Slave Port	no	yes
Packages	28-pin PDIP, 28-pin SOIC, 28-pin SSOP	40-pin PDIP, 44-pin TQFP, 44-pin PLCC

APPENDIX C: CONVERSION CONSIDERATIONS

Considerations for converting from previous versions of devices to the ones listed in this data sheet are listed in Table C-1.

TABLE C-1: CONVERSION CONSIDERATIONS

Characteristic	PIC16C7X	PIC16F87X	PIC16F7X
Pins	28/40	28/40	28/40
Timers	3	3	3
Interrupts	11 or 12	13 or 14	11 or 12
Communication	PSP, USART, SSP (SPI, I^2C Slave)	PSP, USART, SSP (SPI, I^2C Master/Slave)	PSP, USART, SSP (SPI, I^2C Slave)
Frequency	20 MHz	20 MHz	20 MHz
A/D	8-bit	10-bit	8-bit
CCP	2	2	2
Program Memory	4K, 8K EPROM	4K, 8K FLASH (1,000 E/W cycles)	4K, 8K FLASH (100 E/W cycles)
RAM	192, 368 bytes	192, 368 bytes	192, 368 bytes
EEPROM Data	None	128, 256 bytes	None
Other	—	In-Circuit Debugger, Low Voltage Programming	—

NOTES:

 © 2000 Microchip Technology Inc.

INDEX

A

A/D 89
ADCON0 Register 89
ADCON1 Register 90
Analog Input Model Block Diagram 92
Analog Port Pins 7, 8, 9, 37, 38
Analog-to-Digital Converter 89
Block Diagram 91
Configuring Analog Port Pins 93
Configuring the Interrupt 91
Configuring the Module 91
Conversion Clock 93
Conversions 93
Converter Characteristics 144
Effects of a RESET 93
Faster Conversion - Lower Resolution Trade-off 93
Internal Sampling Switch (Rss) Impedance 92
Operation During SLEEP 93
Sampling Requirements 92
Source Impedance 92
Timing Diagram 145
Using the CCP Trigger 93
Absolute Maximum Ratings 125
$\overline{\text{ACK}}$ 67, 69
ADRES Register 15, 89
Analog Port Pins. *See* A/D
Application Notes
AN552 (Implementing Wake-up on Key Strokes Using PIC16F7X) 31
AN556 (Table Reading Using PIC16CXX) 26
AN578 (Use of the SSP Module in the I^2C Multi-Master Environment) 61
Architecture
PIC16F73/PIC16F76 Block Diagram 5
PIC16F74/PIC16F77 Block Diagram 6
Assembler
MPASM Assembler 119

B

Banking, Data Memory 12
BF 62, 67
Block Diagrams
A/D 91
Analog Input Model 92
Capture 57
Compare 58
I^2C Mode 67
PWM 58
SSP in I^2C Mode 67
SSP in SPI Mode 64
Timer0/WDT Prescaler 45
Timer2 53
USART Receive 79
USART Transmit 77
BOR. *See* Brown-out Reset
BRGH bit 75
Brown-out Reset (BOR) 95, 99, 101, 102
Buffer Full Status bit, BF 62

C

Capture/Compare/PWM
Capture
Block Diagram 57
CCP1CON Register 56
CCP1IF 57
Mode 57
Prescaler 57
CCP Timer Resources 55
Compare
Block Diagram 58
Mode 58
Software Interrupt Mode 58
Special Event Trigger 58
Special Trigger Output of CCP1 58
Special Trigger Output of CCP2 58
Interaction of Two CCP Modules 55
Section 55
Special Event Trigger and A/D Conversions 58
Capture/Compare/PWM (CCP)
CCP1
RC2/CCP1 Pin 7, 8
CCP2
RC1/T1OSI/CCP2 Pin 7, 8
PWM Block Diagram 58
PWM Mode 58
CCP1CON 17
CCP2CON 17
CCPR1H Register 15, 17, 55
CCPR1L Register 17, 55
CCPR2H Register 15, 17
CCPR2L Register 15, 17
CCPxM0 bit 56
CCPxM1 bit 56
CCPxM2 bit 56
CCPxM3 bit 56
CCPxX bit 56
CCPxY bit 56
CKE 62
CKP 63
Clock Polarity Select bit, CKP 63
Code Examples
Call of a Subroutine in Page 1 from Page 0 26
Indirect Addressing 27
Code Protection 95, 110
Computed GOTO 26
Configuration Bits 95
Conversion Considerations 157

D

D/$\overline{\text{A}}$ 62
Data Memory 12
Bank Select (RP1:RP0 Bits) 12
General Purpose Registers 12
Register File Map 13, 14
Special Function Registers 15
Data/Address bit, D/$\overline{\text{A}}$ 62
DC Characteristics 127
Development Support 119
Device Differences 157
Device Overview 5
Direct Addressing 27

E

Electrical Characteristics 125
Errata 4
External Clock Input (RA4/T0CKI). *See* Timer0
External Interrupt Input (RB0/INT). *See* Interrupt Sources

F

Firmware Instructions 111
FSR Register 15, 16, 17, 27

I

I/O Ports 29
I^2C
- Addressing 68
- Block Diagram 67
- I^2C Operation 67
- Master Mode 71
- Mode 67
- Mode Selection 67
- Multi-Master Mode 71
- Reception 69
- Reception Timing Diagram 69
- SCL and SDA pins 67
- Slave Mode 67
- Transmission 70

I^2C (SSP Module)
- Timing Diagram, Data 141
- Timing Diagram, Start/Stop Bits 140

ID Locations 95, 110
In-Circuit Serial Programming (ICSP) 95, 110
INDF 17
INDF Register 15, 16, 27
Indirect Addressing 27
- FSR Register 12

Instruction Format 111
Instruction Set 111
- ADDLW 113
- ADDWF 113
- ANDLW 113
- ANDWF 113
- BCF 113
- BSF 113
- BTFSC 114
- BTFSS 114
- CALL 114
- CLRF 114
- CLRW 114
- CLRWDT 114
- COMF 115
- DECF 115
- DECFSZ 115
- GOTO 115
- INCF 115
- INCFSZ 115
- IORLW 116
- IORWF 116
- MOVF 116
- MOVLW 116
- MOVWF 116
- NOP 116
- RETFIE 117
- RETLW 117
- RETURN 117
- RLF 117
- RRF 117
- SLEEP 117
- SUBLW 118
- SUBWF 118
- SWAPF 118
- XORLW 118
- XORWF 118
- Summary Table 112

INT Interrupt (RB0/INT). *See* Interrupt Sources
INTCON 17
INTCON Register 20
- GIE Bit 20
- INTE Bit 20, 21, 22
- INTF Bit 20
- RBIF Bit 20, 21, 31
- T0IE Bit 20

Internal Sampling Switch (Rss) Impedance 92
Interrupt Sources 95, 105
- Block Diagram 105
- Interrupt on Change (RB7:RB4) 31
- RB0/INT Pin, External 7, 8, 106
- TMR0 Overflow 106
- USART Receive/Transmit Complete 73

Interrupts
- Synchronous Serial Port Interrupt 22

Interrupts, Context Saving During 106
Interrupts, Enable Bits
- Global Interrupt Enable (GIE Bit) 20, 105
- Interrupt-on-Change (RB7:RB4) Enable (RBIE Bit) 106
- RB0/INT Enable (INTE Bit) 20, 21, 22
- TMR0 Overflow Enable (T0IE Bit) 20

Interrupts, Flag Bits
- Interrupt-on-Change (RB7:RB4) Flag (RBIF Bit) 20, 21, 31, 106
- RB0/INT Flag (INTF Bit) 20
- TMR0 Overflow Flag (T0IF Bit) 106

K

KEELOQ® Evaluation and Programming Tools 122

L

Loading of PC 26

M

Master Clear ($\overline{\text{MCLR}}$) 7, 8
- $\overline{\text{MCLR}}$ Reset, Normal Operation 99, 101, 102
- $\overline{\text{MCLR}}$ Reset, SLEEP 99, 101, 102

Memory Organization
- Data Memory 12
- Program Memory 11

MPLAB Integrated Development Environment Software 119

O

OPCODE Field Descriptions 111
OPTION 17
OPTION_REG Register 19
- INTEDG Bit 19
- PS2:PS0 Bits 19
- $\overline{\text{PSA}}$ Bit 19, 20
- $\overline{\text{RBPU}}$ Bit 19
- T0CS Bit 19
- T0SE Bit 19

OSC1/CLKIN Pin 7, 8
OSC2/CLKOUT Pin 7, 8

 © 2000 Microchip Technology Inc.

Oscillator Configuration 95, 97
HS 97, 101
LP 97, 101
RC 97, 98, 101
XT 97, 101
Oscillator, WDT 107
Output of TMR2 53

P

P 62
Packaging 149
Paging, Program Memory 11, 26
Parallel Slave Port (PSP) 9, 34, 38
Block Diagram 38
RE0/RD/AN5 Pin 9, 37, 38
RE1/WR/AN6 Pin 9, 37, 38
RE2/CS/AN7 Pin 9, 37, 38
Read Waveforms 39
Select (PSPMODE Bit) 34, 35, 38
Write Waveforms 39
PCFG0 bit 90
PCFG1 bit 90
PCFG2 bit 90
PCL Register 15, 16, 17, 26
PCLATH Register 15, 16, 17, 26
PCON Register 17, 25, 100
POR Bit 25
PIC16F76 Pinout Description 7
PICDEM-1 Low-Cost PICmicro Demo Board 121
PICDEM-2 Low-Cost PIC16CXX Demo Board 121
PICDEM-3 Low-Cost PIC16CXXX Demo Board 121
PICSTART® Plus Entry Level Development System 121
PIE1 Register 17, 21
PIE2 Register 17, 23
Pinout Descriptions
PIC16F73/PIC16F76 7
PIC16F74/PIC16F77 8
PIR1 Register 22
PIR2 Register 24
POP 26
POR. *See* Power-on Reset
PORTA 7, 8, 17
Analog Port Pins 7, 8
Initialization 29
PORTA Register 29
RA3
RA0 and RA5 Port Pins 29
RA4/T0CKI Pin 7, 8, 29
RA5/SS/AN4 Pin 7, 8
TRISA Register 29
PORTA Register 15
PORTB 7, 8, 17
PORTB Register 31
Pull-up Enable (RBPU Bit) 19
RB0/INT Edge Select (INTEDG Bit) 19
RB0/INT Pin, External 7, 8, 106
RB3:RB0 Port Pins 31
RB7:RB4 Interrupt-on-Change 106
RB7:RB4 Interrupt-on-Change Enable
(RBIE Bit) 106
RB7:RB4 Interrupt-on-Change Flag
(RBIF Bit) 20, 21, 31, 106
RB7:RB4 Port Pins 31
TRISB Register 31
PORTB Register 15
PORTC 7, 8, 17
Block Diagram 33
PORTC Register 33
RC0/T1OSO/T1CKI Pin 7, 8
RC1/T1OSI/CCP2 Pin 7, 8
RC2/CCP1 Pin 7, 8
RC3/SCK/SCL Pin 7, 8
RC4/SDI/SDA Pin 7, 8
RC5/SDO Pin 7, 8
RC6/TX/CK Pin 7, 8, 74
RC7/RX/DT Pin 7, 8, 74, 75
TRISC Register 33, 73
PORTC Register 15
PORTD 9, 17, 38
Block Diagram 34
Parallel Slave Port (PSP) Function 34
PORTD Register 34
TRISD Register 34
PORTD Register 15
PORTE 9, 17
Analog Port Pins 9, 37, 38
Block Diagram 35
Input Buffer Full Status (IBF Bit) 36
Input Buffer Overflow (IBOV Bit) 36
PORTE Register 35
PSP Mode Select (PSPMODE Bit) 34, 35, 38
RE0/RD/AN5 Pin 9, 37, 38
RE1/WR/AN6 Pin 9, 37, 38
RE2/CS/AN7 Pin 9, 37, 38
TRISE Register 35
PORTE Register 15
Postscaler, WDT
Assignment (PSA Bit) 19, 20
Rate Select (PS2:PS0 Bits) 19
Power-down Mode. *See* SLEEP
Power-on Reset (POR) 95, 99, 100, 101, 102
Oscillator Start-up Timer (OST) 95, 100
POR Status (POR Bit) 25
Power Control (PCON) Register 100
Power-down (PD Bit) 99
Power-up Timer (PWRT) 95, 100
Time-out (TO Bit) 18, 99
Time-out Sequence on Power-up 103, 104
PR2 17
PR2 Register 16, 53
Prescaler, Timer0
Assignment (PSA Bit) 19, 20
Rate Select (PS2:PS0 Bits) 19
PRO MATE® II Universal Programmer 121
Program Counter
RESET Conditions 101
Program Memory 11
Interrupt Vector 11
Paging 11, 26
Program Memory Map 11
Reset Vector 11
Program Verification 110
Programming Pin (VPP) 7, 8
Programming, Device Instructions 111
PUSH 26

R

R/$\overline{W}$ 62
R/$\overline{W}$ bit 68, 69, 70
RAM. *See* Data Memory
RCREG 17
RCSTA Register 17, 74
    OERR Bit 74
    SPEN Bit 73
    SREN Bit 74
Read/Write bit Information, R/$\overline{W}$ 62
Receive Overflow Indicator bit, SSPOV 63
Register File 12
Register File Map 13, 14
Registers
    FSR
        Summary 17
    INDF
        Summary 17
    INTCON
        Summary 17
    OPTION
        Summary 17
    PCL
        Summary 17
    PCLATH
        Summary 17
    PORTB
        Summary 17
    SSPSTAT 62
    STATUS
        Summary 17
    Summary 15
    TMR0
        Summary 17
    TRISB
        Summary 17
RESET 95, 99
RESET
    Block Diagram 99
    Brown-out Reset (BOR). *See* Brown-out Reset (BOR)
    $\overline{MCLR}$ Reset. *See* $\overline{MCLR}$
    Power-on Reset (POR). *See* Power-on Reset (POR)
    RESET Conditions for All Registers 102
    RESET Conditions for PCON Register 101
    RESET Conditions for Program Counter 101
    RESET Conditions for STATUS Register 101
    WDT Reset. *See* Watchdog Timer (WDT)
Revision History 157

S

S 62
SCI. *See* USART
SCL 67
Serial Communication Interface. *See* USART
Slave Mode
    SCL 67
    SDA 67
SLEEP 95, 99, 108
SMP 62
Software Simulator (MPLAB-SIM) 120
SPBRG 17
SPBRG Register 16
Special Features of the CPU 95
Special Function Registers 15
    PIC16F73 15
    PIC16F74 15
Speed, Operating 1
SPI
    Block Diagram 64
    Master Mode Timing 65
    Serial Clock 61
    Serial Data In 61
    Serial Data Out 61
    Slave Mode Timing 65
    Slave Mode Timing Diagram 65
    Slave Select 61
    SPI Mode 61
    SSPCON 63
    SSPSTAT 62
SPI Clock Edge Select bit, CKE 62
SPI Data Input Sample Phase Select bit, SMP 62
SSP
    Module Overview 61
    RA5/$\overline{SS}$/AN4 Pin 7, 8
    RC3/SCK/SCL Pin 7, 8
    RC4/SDI/SDA Pin 7, 8
    RC5/SDO Pin 7, 8
    Section 61
    SSPCON 63
    SSPSTAT 62
SSPADD Register 17
SSPBUF 17
SSPBUF Register 15
SSPCON 63
SSPCON Register 15
SSPEN 63
SSPIF 22
SSPM3:SSPM0 63
SSPOV 63, 67
SSPSTAT Register 16, 17, 62
Stack 26
    Overflows 26
    Underflow 26
START bit, S 62
STATUS Register 17, 18
    DC Bit 18, 36
    IRP Bit 18
    $\overline{PD}$ Bit 99
    $\overline{TO}$ Bit 18, 99
    Z Bit 18, 36
STOP bit, P 62
Synchronous Serial Port Enable bit, SSPEN 63
Synchronous Serial Port Interrupt 22
Synchronous Serial Port Mode Select bits,
SSPM3:SSPM0 63
Synchronous Serial Port Module 61
Synchronous Serial Port Status Register 62

 © 2000 Microchip Technology Inc.

T

T1CKPS0 bit 49
T1CKPS1 bit 49
T1CON 17
T1CON Register 17, 49
T1OSCEN bit 49
T1SYNC bit 49
T2CKPS0 bit 54
T2CKPS1 bit 54
T2CON Register 17, 54
TAD 93
Timer0
    Clock Source Edge Select (T0SE Bit) 19
    Clock Source Select (T0CS Bit) 19
    Overflow Enable (T0IE Bit) 20
    Overflow Flag (T0IF Bit) 106
    Overflow Interrupt 106
    RA4/T0CKI Pin, External Clock 7, 8
Timer1 49
    RC0/T1OSO/T1CKI Pin 7, 8
    RC1/T1OSI/CCP2 Pin 7, 8
Timers
    Timer0
        External Clock 46
        Interrupt 45
        Prescaler 46
        Prescaler Block Diagram 45
        Section 45
        T0CKI 46
    Timer1
        Asynchronous Counter Mode 51
        Capacitor Selection 51
        Operation in Timer Mode 50
        Oscillator 51
        Prescaler 51
        Resetting of Timer1 Registers 51
        Resetting Timer1 Using a
        CCP Trigger Output 51
        Synchronized Counter Mode 50
        T1CON 49
        TMR1H 51
        TMR1L 51
    Timer2
        Block Diagram 53
        Postscaler 53
        Prescaler 53
        T2CON 54
Timing Diagrams
    Brown-out Reset 134
    Capture/Compare/PWM 136
    CLKOUT and I/O 133
    I2C Reception (7-bit Address) 69
    Power-up Timer 134
    RESET 134
    SPI Master Mode 65
    SPI Slave Mode (CKE = 1) 65
    SPI Slave Mode Timing (CKE = 0) 65
    Start-up Timer 134
    Time-out Sequence on Power-up 103, 104
    Timer0 135
    Timer1 135
    USART Asynchronous Master Transmission 78
    USART Asynchronous Reception 79
    USART Synchronous Receive 143
    USART Synchronous Reception 85
    USART Synchronous Transmission 83, 143
    Wake-up from SLEEP via Interrupt 109
    Watchdog Timer 134
Timing Diagrams and Specifications
    A/D Conversion 145
    I2C Bus Data 141
    I2C Bus START/STOP Bits 140
TMR0 17
TMR0 Register 15
TMR1CS bit 49
TMR1H 17
TMR1H Register 15
TMR1L 17
TMR1L Register 15
TMR1ON bit 49
TMR2 17
TMR2 Register 15
TMR2ON bit 54
TOUTPS0 bit 54
TOUTPS1 bit 54
TOUTPS2 bit 54
TOUTPS3 bit 54
TRISA 17
TRISA Register 16
TRISB 17
TRISB Register 16
TRISC 17
TRISC Register 16
TRISD 17
TRISD Register 16
TRISE 17
TRISE Register 16, 35
    IBF Bit 36
    IBOV Bit 36
    PSPMODE Bit 34, 35, 38
TXREG 17
TXSTA 17
TXSTA Register 73
    SYNC Bit 73, 74
    TRMT Bit 73
    TX9 Bit 73
    TX9D Bit 73
    TXEN Bit 73, 89

U

UA 62
Universal Synchronous Asynchronous
Receiver Transmitter. *See* USART
Update Address bit, UA 62
USART 73
    Asynchronous Mode 77
        Receive Block Diagram 81
    Asynchronous Receiver 79
    Asynchronous Reception 80
    Asynchronous Transmitter 77
    Baud Rate Generator (BRG) 75
        Baud Rate Formula 75
        Baud Rates, Asynchronous Mode (BRGH=0) ... 76
        Sampling 75
    Mode Select (SYNC Bit) 73, 74
    Overrun Error (OERR Bit) 74
    RC6/TX/CK Pin 7, 8
    RC7/RX/DT Pin 7, 8
    RCSTA Register 74
    Receive Block Diagram 79
    Serial Port Enable (SPEN Bit) 73
    Single Receive Enable (SREN Bit) 74
    Synchronous Master Mode 82
    Synchronous Master Reception 84
    Synchronous Master Transmission 82
    Synchronous Slave Mode 86
    Transmit Block Diagram 77
    Transmit Data, 9th Bit (TX9D) 73
    Transmit Enable (TXEN Bit) 73, 89
    Transmit Enable, Nine-bit (TX9 Bit) 73
    Transmit Shift Register Status (TRMT Bit) 73
    TXSTA Register 73

W

Wake-up from SLEEP 95, 108
    Interrupts 101, 102
    $\overline{\text{MCLR}}$ Reset 102
    Timing Diagram 109
    WDT Reset 102
Watchdog Timer (WDT) 95, 107
    Block Diagram 107
    Enable (WDTE Bit) 107
    Postscaler. *See* Postscaler, WDT
    Programming Considerations 107
    RC Oscillator 107
    Time-out Period 107
    WDT Reset, Normal Operation 99, 101, 102
    WDT Reset, SLEEP 99, 101, 102
WCOL 63
Write Collision Detect bit, WCOL 63
WWW, On-Line Support 4

 © 2000 Microchip Technology Inc.

ON-LINE SUPPORT

Microchip provides on-line support on the Microchip World Wide Web (WWW) site.

The web site is used by Microchip as a means to make files and information easily available to customers. To view the site, the user must have access to the Internet and a web browser, such as Netscape or Microsoft Explorer. Files are also available for FTP download from our FTP site.

Connecting to the Microchip Internet Web Site

The Microchip web site is available by using your favorite Internet browser to attach to:

www.microchip.com

The file transfer site is available by using an FTP service to connect to:

ftp://ftp.microchip.com

The web site and file transfer site provide a variety of services. Users may download files for the latest Development Tools, Data Sheets, Application Notes, User's Guides, Articles and Sample Programs. A variety of Microchip specific business information is also available, including listings of Microchip sales offices, distributors and factory representatives. Other data available for consideration is:

- Latest Microchip Press Releases
- Technical Support Section with Frequently Asked Questions
- Design Tips
- Device Errata
- Job Postings
- Microchip Consultant Program Member Listing
- Links to other useful web sites related to Microchip Products
- Conferences for products, Development Systems, technical information and more
- Listing of seminars and events

Systems Information and Upgrade Hot Line

The Systems Information and Upgrade Line provides system users a listing of the latest versions of all of Microchip's development systems software products. Plus, this line provides information on how customers can receive any currently available upgrade kits.The Hot Line Numbers are:

1-800-755-2345 for U.S. and most of Canada, and

1-480-786-7302 for the rest of the world.

000815

Trademarks: The Microchip name, logo, PIC, PICmicro, PICSTART, PICMASTER, PRO MATE and MPLAB are registered trademarks of Microchip Technology Incorporated in the U.S.A. and other countries. *Flex*ROM, microID and *fuzzy*LAB are trademarks and SQTP is a service mark of Microchip in the U.S.A.

All other trademarks mentioned herein are the property of their respective companies.

READER RESPONSE

It is our intention to provide you with the best documentation possible to ensure successful use of your Microchip product. If you wish to provide your comments on organization, clarity, subject matter, and ways in which our documentation can better serve you, please FAX your comments to the Technical Publications Manager at (480) 786-7578.

Please list the following information, and use this outline to provide us with your comments about this Data Sheet.

To: Technical Publications Manager Total Pages Sent

RE: Reader Response

From: Name _____

Company _____

Address _____

City / State / ZIP / Country _____

Telephone: (_____) _____ - _____ FAX: (_____) _____ - _____

Application (optional):

Would you like a reply?____Y ____N

Device: **PIC16F7X** Literature Number: **DS30325A**

Questions:

1. What are the best features of this document?

_____

_____

2. How does this document meet your hardware and software development needs?

_____

_____

3. Do you find the organization of this data sheet easy to follow? If not, why?

_____

_____

4. What additions to the data sheet do you think would enhance the structure and subject?

_____

_____

5. What deletions from the data sheet could be made without affecting the overall usefulness?

_____

_____

6. Is there any incorrect or misleading information (what and where)?

_____

_____

7. How would you improve this document?

_____

_____

8. How would you improve our software, systems, and silicon products?

_____

_____

 © 2000 Microchip Technology Inc.

PIC16F7X PRODUCT IDENTIFICATION SYSTEM

To order or obtain information, e.g., on pricing or delivery, refer to the factory or the listed sales office.

PART NO.	X	/XX	XXX
Device	Temperature Range	Package	Pattern

Device	PIC16F7X(1), PIC16F7XT(1); VDD range 4.0V to 5.5V PIC16LF7X(1), PIC16LF7XT(1); VDD range 2.0V to 5.5V		
Temperature Range	I	=	-40°C to +85°C (Industrial)
Package	PT	=	TQFP (Thin Quad Flatpack)
	SO	=	SOIC
	SP	=	Skinny plastic dip
	P	=	PDIP
	L	=	PLCC
	SS	=	SSOP
Pattern	QTP, SQTP, Code or Special Requirements (blank otherwise)		

Examples:

a) PIC16F77-I/P 301 = Commercial temp., PDIP package, normal VDD limits, QTP pattern #301.

b) PIC16LF76-I/SO = Industrial temp., SOIC package, 200 kHz, Extended VDD limits.

c) PIC16F74-I/P = Industrial temp., PDIP package, normal VDD limits.

Note 1: F = CMOS FLASH
LF = Low Power CMOS FLASH
T = in tape and reel - SOIC, PLCC, SSOP, TQFP packages only.

Sales and Support

Data Sheets
Products supported by a preliminary Data Sheet may have an errata sheet describing minor operational differences and recommended workarounds. To determine if an errata sheet exists for a particular device, please contact one of the following:

1. Your local Microchip sales office
2. The Microchip Corporate Literature Center U.S. FAX: (480) 786-7277
3. The Microchip Worldwide Site (www.microchip.com)

Please specify which device, revision of silicon and Data Sheet (include Literature #) you are using.

New Customer Notification System
Register on our web site (www.microchip.com/cn) to receive the most current information on our products.

WORLDWIDE SALES AND SERVICE

AMERICAS

Corporate Office
2355 West Chandler Blvd.
Chandler, AZ 85224-6199
Tel: 480-786-7200 Fax: 480-786-7277
Technical Support: 480-786-7627
Web Address: http://www.microchip.com

Rocky Mountain
2355 West Chandler Blvd.
Chandler, AZ 85224-6199
Tel: 480-786-7966 Fax: 480-786-7456

Atlanta
500 Sugar Mill Road, Suite 200B
Atlanta, GA 30350
Tel: 770-640-0034 Fax: 770-640-0307

Boston
2 Lan Drive, Suite 120
Westford, MA 01886
Tel: 978-692-3838 Fax: 978-692-3821

Chicago
333 Pierce Road, Suite 180
Itasca, IL 60143
Tel: 630-285-0071 Fax: 630-285-0075

Dallas
4570 Westgrove Drive, Suite 160
Addison, TX 75001
Tel: 972-818-7423 Fax: 972-818-2924

Dayton
Two Prestige Place, Suite 130
Miamisburg, OH 45342
Tel: 937-291-1654 Fax: 937-291-9175

Detroit
Tri-Atria Office Building
32255 Northwestern Highway, Suite 190
Farmington Hills, MI 48334
Tel: 248-538-2250 Fax: 248-538-2260

Los Angeles
18201 Von Karman, Suite 1090
Irvine, CA 92612
Tel: 949-263-1888 Fax: 949-263-1338

New York
150 Motor Parkway, Suite 202
Hauppauge, NY 11788
Tel: 631-273-5305 Fax: 631-273-5335

San Jose
Microchip Technology Inc.
2107 North First Street, Suite 590
San Jose, CA 95131
Tel: 408-436-7950 Fax: 408-436-7955

Toronto
6285 Northam Drive, Suite 108
Mississauga, Ontario L4V 1X5, Canada
Tel: 905-673-0699 Fax: 905-673-6509

ASIA/PACIFIC

China - Beijing
Microchip Technology Beijing Office
Unit 915
New China Hong Kong Manhattan Bldg.
No. 6 Chaoyangmen Beidajie
Beijing, 100027, No. China
Tel: 86-10-85282100 Fax: 86-10-85282104

China - Shanghai
Microchip Technology Shanghai Office
Room 701, Bldg. B
Far East International Plaza
No. 317 Xian Xia Road
Shanghai, 200051
Tel: 86-21-6275-5700 Fax: 86-21-6275-5060

Hong Kong
Microchip Asia Pacific
RM 2101, Tower 2, Metroplaza
223 Hing Fong Road
Kwai Fong, N.T., Hong Kong
Tel: 852-2401-1200 Fax: 852-2401-3431

India
Microchip Technology Inc.
India Liaison Office
Divyasree Chambers
1 Floor, Wing A (A3/A4)
No. 11, O'Shaugnessey Road
Bangalore, 560 027, India
Tel: 91-80-207-2165 Fax: 91-80-207-2171

Japan
Microchip Technology Intl. Inc.
Benex S-1 6F
3-18-20, Shinyokohama
Kohoku-Ku, Yokohama-shi
Kanagawa, 222-0033, Japan
Tel: 81-45-471- 6166 Fax: 81-45-471-6122

Korea
Microchip Technology Korea
168-1, Youngbo Bldg. 3 Floor
Samsung-Dong, Kangnam-Ku
Seoul, Korea
Tel: 82-2-554-7200 Fax: 82-2-558-5934

ASIA/PACIFIC (continued)

Singapore
Microchip Technology Singapore Pte Ltd.
200 Middle Road
#07-02 Prime Centre
Singapore, 188980
Tel: 65-334-8870 Fax: 65-334-8850

Taiwan
Microchip Technology Taiwan
11F-3, No. 207
Tung Hua North Road
Taipei, 105, Taiwan
Tel: 886-2-2717-7175 Fax: 886-2-2545-0139

EUROPE

Denmark
Microchip Technology Denmark ApS
Regus Business Centre
Lautrup hoj 1-3
Ballerup DK-2750 Denmark
Tel: 45 4420 9895 Fax: 45 4420 9910

France
Arizona Microchip Technology SARL
Parc d'Activite du Moulin de Massy
43 Rue du Saule Trapu
Batiment A - ler Etage
91300 Massy, France
Tel: 33-1-69-53-63-20 Fax: 33-1-69-30-90-79

Germany
Arizona Microchip Technology GmbH
Gustav-Heinemann Ring 125
D-81739 Munich, Germany
Tel: 49-89-627-144 0 Fax: 49-89-627-144-44

Italy
Arizona Microchip Technology SRL
Centro Direzionale Colleoni
Palazzo Taurus 1 V. Le Colleoni 1
20041 Agrate Brianza
Milan, Italy
Tel: 39-039-65791-1 Fax: 39-039-6899883

United Kingdom
Arizona Microchip Technology Ltd.
505 Eskdale Road
Winnersh Triangle
Wokingham
Berkshire, England RG41 5TU
Tel: 44 118 921 5869 Fax: 44-118 921-5820

9/01/00

DNV Certification, Inc. USA
ANSI • RAB QMS ACCREDITED
DNV MSC The Netherlands Accredited by the RvA
ISO 9001 / QS-9000 REGISTERED FIRM

Microchip received QS-9000 quality system certification for its worldwide headquarters, design and wafer fabrication facilities in Chandler and Tempe, Arizona in July 1999. The Company's quality system processes and procedures are QS-9000 compliant for its PICmicro® 8-bit MCUs, KEELOQ® code hopping devices, Serial EEPROMs and microperipheral products. In addition, Microchip's quality system for the design and manufacture of development systems is ISO 9001 certified.

All rights reserved. © 2000 Microchip Technology Incorporated. Printed in the USA. 9/00 Printed on recycled paper.

Information contained in this publication regarding device applications and the like is intended through suggestion only and may be superseded by updates. It is your responsibility to ensure that your application meets with your specifications. No representation or warranty is given and no liability is assumed by Microchip Technology Incorporated with respect to the accuracy or use of such information, or infringement of patents or other intellectual property rights arising from such use or otherwise. Use of Microchip's products as critical components in life support systems is not authorized except with express written approval by Microchip. No licenses are conveyed, implicitly or otherwise, except as maybe explicitly expressed herein, under any intellectual property rights. The Microchip logo and name are registered trademarks of Microchip Technology Inc. in the U.S.A. and other countries. All rights reserved. All other trademarks mentioned herein are the property of their respective companies.